VELJAN	Service Information	SS4-00152

VT67DBB

Triple vane pump

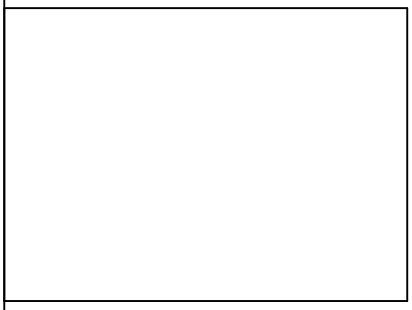

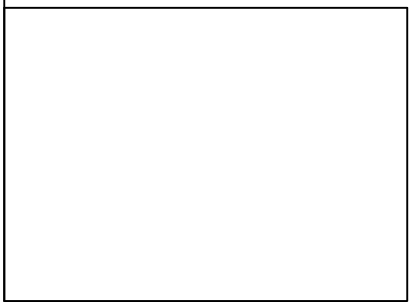

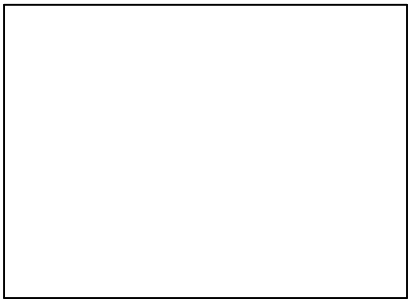

PHOTO

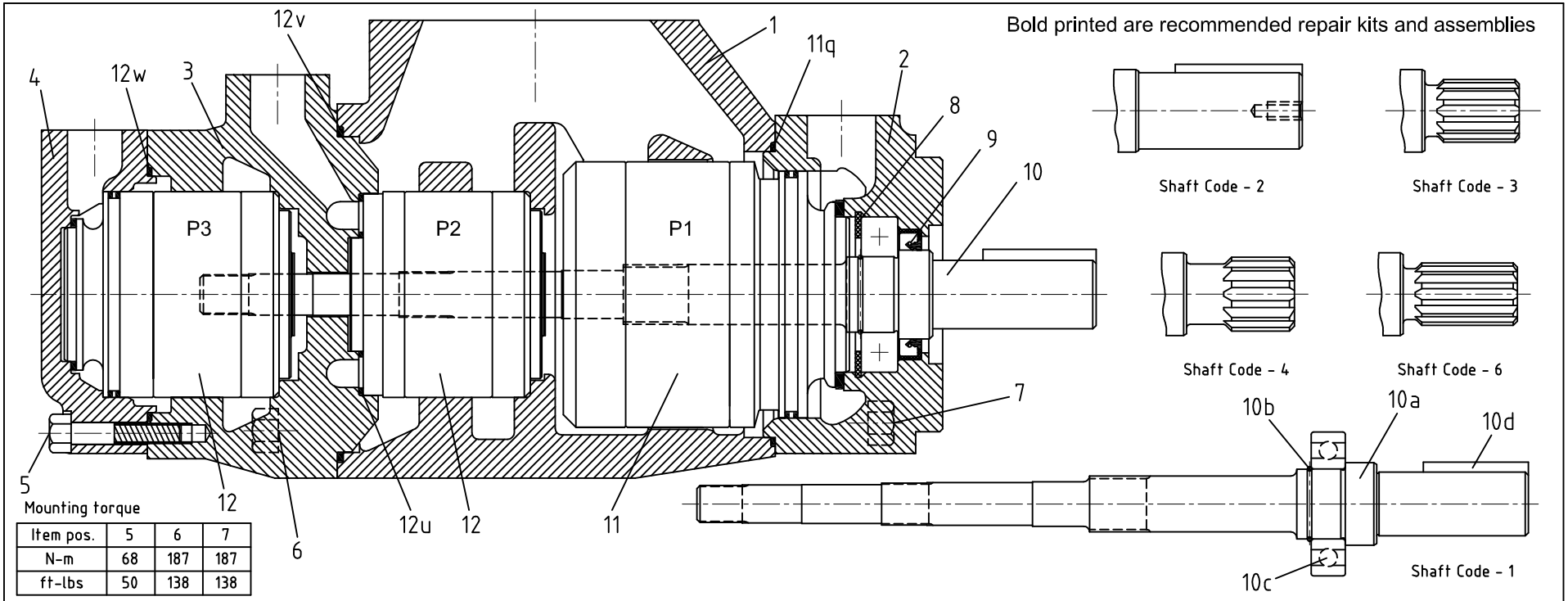

Bold printed are recommended repair kits and assemblies

Mounting torque

Item pos.	5	6	7
N-m	68	187	187
ft-lbs	50	138	138

Item pos.	Description	Part No. VT67DBB (Standard)	Part No. VT67DBB (Bi-dir plates)	Qty
1	Housing (UNC)	V034-66497	V034-66497	1
	Housing (Metric)	H-034-66763	H-034-66763	
2	Mounting flange (UNC)	V034-66495	V034-66495	1
	Mounting flange (Metric)	C-SK-00220	C-SK-00220	
3	Port block (UNC)	V034-66499	V034-66499	1
	Port block (Metric)	H-034-66764	H-034-66764	
4	End cap (UNC) (P3 = 3/4")	V034-66523	V034-66523	1
	End cap (Metric) (P3 = 3/4")	H-034-66765	H-034-66765	
5	Mounting Screw	V306-40111	V306-40111	7
6	Mounting Screw	V306-40154	V306-40154	4
7	Mounting Screw	V306-40156	V306-40156	4

Item pos.	Description	Part No. VT67DBB (Standard)	Part No. VT67DBB (Bi-dir plates)	Qty
8	Retaining ring	V356-32283	V356-32283	1
9	Shaft seal (S1-0.7 bar)	V620-82064	V620-82064	1
	Shaft seal (S4-S5-7 bar)	V620-82072	V620-82072	
10	Shaft and bearing ass'y (Code-1)	VS24-25571	VS24-25571	1
	Shaft and bearing ass'y (Code-2)	VS24-25572	VS24-25572	
	Shaft and bearing ass'y (Code-3)	VS24-25573	VS24-25573	
	Shaft and bearing ass'y (Code-4)	VS24-25574	VS24-25574	
10a	Shaft (Keyed) (Code-1)	V034-66500	V034-66500	1
	Shaft (Keyed) (Code-2)	V034-66513	V034-66513	
	Shaft (Splined) (Code-3)	V034-66511	V034-66511	
	Shaft (splined) (Code-4)	V034-66514	V034-66514	
10b	Round section ring	V034-70853	V034-70853	1
10c	Ball bearing	V230-00207	V230-00207	1

10d	Key (Code -1)	V034-19579	V034-19579	1
	Key (Code -2)	V034-66981	V034-66981	
11	Cartridge assembly B14 C.W. (P1)		VS24-76312	1
	Cartridge assembly B14 C.C.W. (P1)		VS24-76313	
	Cartridge assembly B17 C.W. (P1)		VS24-76314	
	Cartridge assembly B17 C.C.W. (P1)		VS24-76315	
	Cartridge assembly B20 C.W. (P1)		VS24-76316	
	Cartridge assembly B20 C.C.W. (P1)		VS24-76317	
	Cartridge assembly B22 C.W. (P1)		VS24-76318	
	Cartridge assembly B22 C.C.W. (P1)		VS24-76319	
	Cartridge assembly B24 C.W. (P1)		VS24-76320	
	Cartridge assembly B24 C.C.W. (P1)		VS24-76321	
	Cartridge assembly B28 C.W. (P1)		VS24-76322	
	Cartridge assembly B28 C.C.W. (P1)		VS24-76323	
	Cartridge assembly B31 C.W. (P1)		VS24-76324	
	Cartridge assembly B31 C.C.W. (P1)		VS24-76325	
	Cartridge assembly B35 C.W. (P1)		VS24-76326	
	Cartridge assembly B35 C.C.W. (P1)		VS24-76327	
	Cartridge assembly B38 C.W. (P1)		VS24-76328	

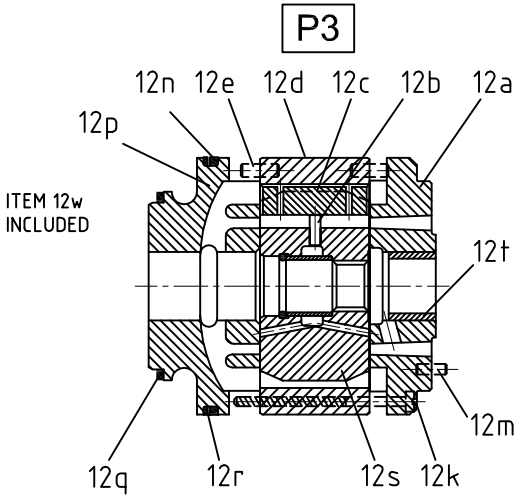

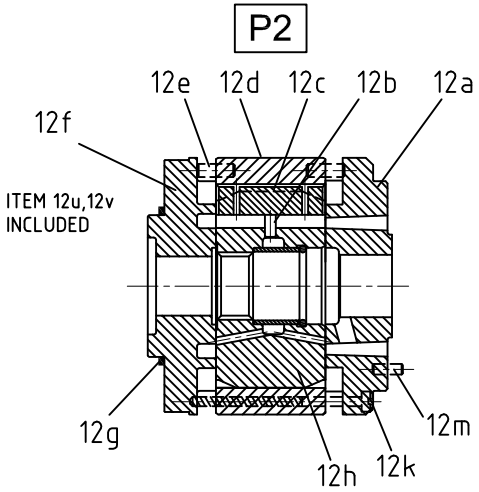

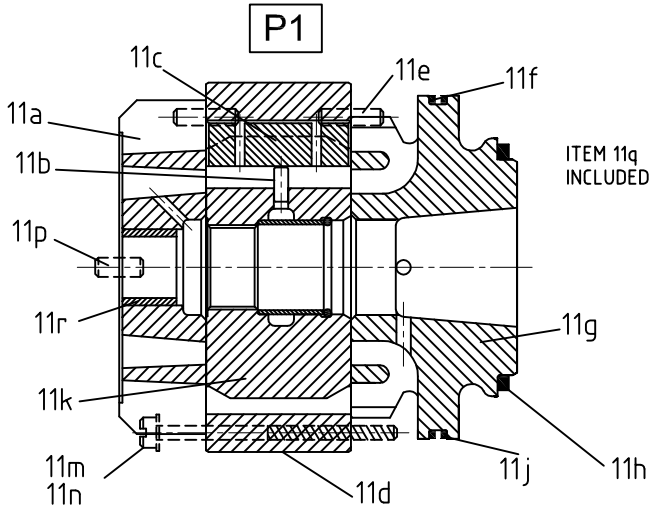

	Cartridge assembly B38 C.C.W. (P1)		VS24-76329	
	Cartridge assembly B42 C.W. (P1)		VS24-76330	
	Cartridge assembly B42 C.C.W. (P1)		VS24-76331	
	Cartridge assembly B45 C.W. (P1)		VS24-10847	
	Cartridge assembly B45 C.C.W. (P1)		VS24-10848	
	Cartridge assembly 050 C.W. (P1)		VS24-40228	
	Cartridge assembly 050 C.C.W. (P1)		VS24-40029	
11a	Port plate - rear C.W.	H-034-67112		1
	Port plate - rear C.C.W.	H-034-67114		
	Port plate - rear Bi-dir		H-034-67478	
11b	Pin vane holdout	V034-59098	V034-59098	12
11c	Vane	H-034-67453	H-034-67453	12
11d	Cam ring - 014		H-034-67469	1
	Cam ring - 017		H-034-67470	
	Cam ring - 020		H-034-67159	
	Cam ring - 022		H-034-67482	
	Cam ring - 024		H-034-67158	
	Cam ring - 028		H-034-67157	
	Cam ring - 031		H-034-67156	
	Cam ring - 035		H-034-67155	
	Cam ring - 038		H-034-67154	
	Cam ring - 042		H-034-67153	
	Cam ring - 045		V034-59131	
	Cam ring - 050		V034-66737	
11e	Dowel pin	V324-21612	V324-21612	2
11f	Back-up ring	V618-15017	V618-15017	1
11g	Port plate - pressure C.W.	H-034-67111		1
	Port plate - pressure C.C.W.	H-034-67113		
	Port plate - pressure Bi-dir		H-034-67479	
11h	Sq. section seal	V691-10232	V691-10232	1
11j	Sq. section seal	V691-10244	V691-10244	1
11k	Rotor-insert ass'y	H-S24-73783	H-S24-73783	1
11m	Screw	V317-10320	V317-10320	1

11n	Lockwasher internal tooth	V348-10010	V348-10010	1
11p	Dowel pin	V323-82004	V323-82004	1
11q	Sq. section seal	V671-10159	V671-10159	1
11r	Bush	V034-70868	V034-70868	1
12	Cartridge assembly B02 C.W. (P2)		VS24-59709	1
	Cartridge assembly B02 C.C.W. (P2)		VS24-59710	
	Cartridge assembly B03 C.W. (P2)		VS24-59711	
	Cartridge assembly B03 C.C.W. (P2)		VS24-59712	
	Cartridge assembly B04 C.W. (P2)		VS24-59713	
	Cartridge assembly B04 C.C.W. (P2)		VS24-59714	
	Cartridge assembly B05 C.W. (P2)		VS24-59715	
	Cartridge assembly B05 C.C.W. (P2)		VS24-59716	
	Cartridge assembly B06 C.W. (P2)		VS24-59717	
	Cartridge assembly B06 C.C.W. (P2)		VS24-59718	
	Cartridge assembly B07 C.W. (P2)		VS24-59976	
	Cartridge assembly B07 C.C.W. (P2)		VS24-59977	
	Cartridge assembly B08 C.W. (P2)		VS24-59719	
	Cartridge assembly B08 C.C.W. (P2)		VS24-59720	
	Cartridge assembly B09 C.W. (P2)		VS24-77916	
	Cartridge assembly B09 C.C.W. (P2)		VS24-59917	
	Cartridge assembly B10 C.W. (P2)		VS24-59721	
	Cartridge assembly B10 C.C.W. (P2)		VS24-59722	
	Cartridge assembly B11 C.W. (P2)		VS24-77918	
	Cartridge assembly B11 C.C.W. (P2)		VS24-77919	
	Cartridge assembly B12 C.W. (P2)		VS24-59723	
	Cartridge assembly B12 C.C.W. (P2)		VS24-59724	
	Cartridge assembly B14 C.W. (P2)		VS24-77920	
	Cartridge assembly B14 C.C.W. (P2)		VS24-77921	
	Cartridge assembly B15 C.W. (p2)		VS24-59725	
	Cartridge assembly B15 C.C.W. (P2)		VS24-59726	
	Cartridge assembly B02 C.W. (P3)		VS24-50610	1
	Cartridge assembly B02 C.C.W. (P3)		VS24-50611	
	Cartridge assembly B03 C.W. (P3)		VS24-50612	
	Cartridge assembly B03 C.C.W. (P3)		VS24-50613	
	Cartridge assembly B04 C.W. (P3)		VS24-50614	
	Cartridge assembly B04 C.C.W. (P3)		VS24-50615	
	Cartridge assembly B05 C.W. (P3)		VS24-50616	
	Cartridge assembly B05 C.C.W. (P3)		VS24-50617	
	Cartridge assembly B06 C.W. (P3)		VS24-50618	
	Cartridge assembly B06 C.C.W. (P3)		VS24-50619	
	Cartridge assembly B07 C.W. (P3)		VS24-59907	
	Cartridge assembly B07 C.C.W. (P3)		VS24-59908	
	Cartridge assembly B08 C.W. (P3)		VS24-50620	
	Cartridge assembly B08 C.C.W. (P3)		VS24-50621	
	Cartridge assembly B09 C.W. (P3)		VS24-72910	
	Cartridge assembly B09 C.C.W. (P3)		VS24-72697	
	Cartridge assembly B10 C.W. (P3)		VS24-50622	
	Cartridge assembly B10 C.C.W. (P3)		VS24-50623	
	Cartridge assembly B11 C.W. (P3)		VS24-76173	
	Cartridge assembly B11 C.C.W. (P3)		VS24-76880	
	Cartridge assembly B12 C.W. (P3)		VS24-59009	
	Cartridge assembly B12 C.C.W. (P3)		VS24-59010	
	Cartridge assembly B14 C.W. (P3)		VS24-77174	
	Cartridge assembly B14 C.C.W. (P3)		VS24-77176	
	Cartridge assembly B15 C.W. (P3)		VS24-59011	
	Cartridge assembly B15 C.C.W. (P3)		VS24-59012	
12a	Port plate - rear Bi-dir		C-034-03220	2
12b	Pin vane holdout	H-034-66920	H-034-66920	24
12c	Vane	H-034-66917	H-034-66917	24
12d	Cam ring - 002		H-034-66909	2
	Cam ring - 003		H-034-66910	
	Cam ring - 004		H-034-66911	
	Cam ring - 005		H-034-66912	
	Cam ring - 006		H-034-66913	
	Cam ring - 007		H-034-67063	
	Cam ring - 008		H-034-66914	
	Cam ring - 009		H-034-67383	
	Cam ring - 010		H-034-66915	
	Cam ring - 011		H-034-67461	
	Cam ring - 012		H-034-67032	
	Cam ring - 014		H-034-67409	
	Cam ring - 015		H-034-67034	
12e	Dowel pin	V324-21208	V324-21208	4
12f	Port plate - pressure(BI-DIR)		H-034-67060	1
12g	Sq. section seal	V691-10137	V691-10137	1
12h	Rotor-insert ass'y	H-S24-51722	H-S24-51722	1
12k	Screw	V317-06266	V317-06266	4
12m	Dowel pin	V323-82010	V323-82010	2
12n	Sq. section seal	V691-10238	V691-10238	1
12p	Port plate - pressure(BI-DIR)		H-034-66923	1

12q	Sq. section seal	V691-10229	V691-10229	1
12r	Back-up ring	V618-15016	V618-15016	1
12s	Rotor-insert ass'y	H-S24-49820	H-S24-49820	1
12t	Bush	C-SK-00289	C-SK-00289	1
12u	Sq. section seal	V691-10153	V691-10153	1
12v	Sq. section seal	V691-10256	V691-10256	1
12w	Sq. section seal	V671-10156	V671-10156	1
9,11f	Seal kit (S1 - 0.7 bar)	VS24-25575	VS24-25575	1
11h,11j	Seal kit (S4 - 7 bar)	VS24-25575-4	VS24-25575-4	
11q,12g	Seal kit (S5 - 7 bar)	VS24-25575-5	VS24-25575-5	
12n,12q				
12r,12u				
12v,12w				
11a	Port plate - rear and bush ass'y C.W. (P1)	VS24-63709		1
11p	Port plate - rear and bush ass'y C.C.W. (P1)	VS24-63710		
	Port plate - rear and bush ass'y Bi-dir (P1)		VS24-76332	
12a	Port plate - rear ass'y Bi-dir (P2)		VS24-58196	1
12a	Port plate - rear and bush ass'y Bi-dir (P3)		VS24-50642	1
12t				

*0 - Standard B - Bi-directional plates/Mobile R - Mobile spring-assisted (on request)

To change porting position, follow the steps below:

1. Secure pump and remove 4 bolts from mounting flange, move the mounting flange 1 to 2 mm away from housing. Insert One bolt halfway to mounting flange. Install a Wrench between the shaft and bolt and turn in the desired way, so that the required position of P1 port with respect to suction is obtained. Reinstall the bolts and tighten to corresponding torque.

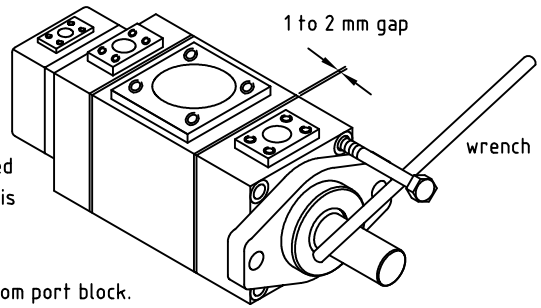

2. To change P2 position, remove 4 bolts from port block. Remove 2 bolts (diagonally opposite) from end cap and insert them halfway to end cap. Install a wrench between these two bolts and turn in the desired way, so that required position of P2 port with respect to suction is obtained.

3. Follow the similar procedure for changing P3 position. Use wrench between two bolts placed diagonally opposite.

Instruction : Do not remove mounting flange/port block/end cap completely from the housing/ port block cartridge pin to move out from the housing dowel pin hole,make sure no piece of paint enters in to the gap to avoid leakage. If it is difficult to turn housing put some hydraulic oil to the pressure ports to lubricate the pressure port seals.

▼ PORTING COMBINATION

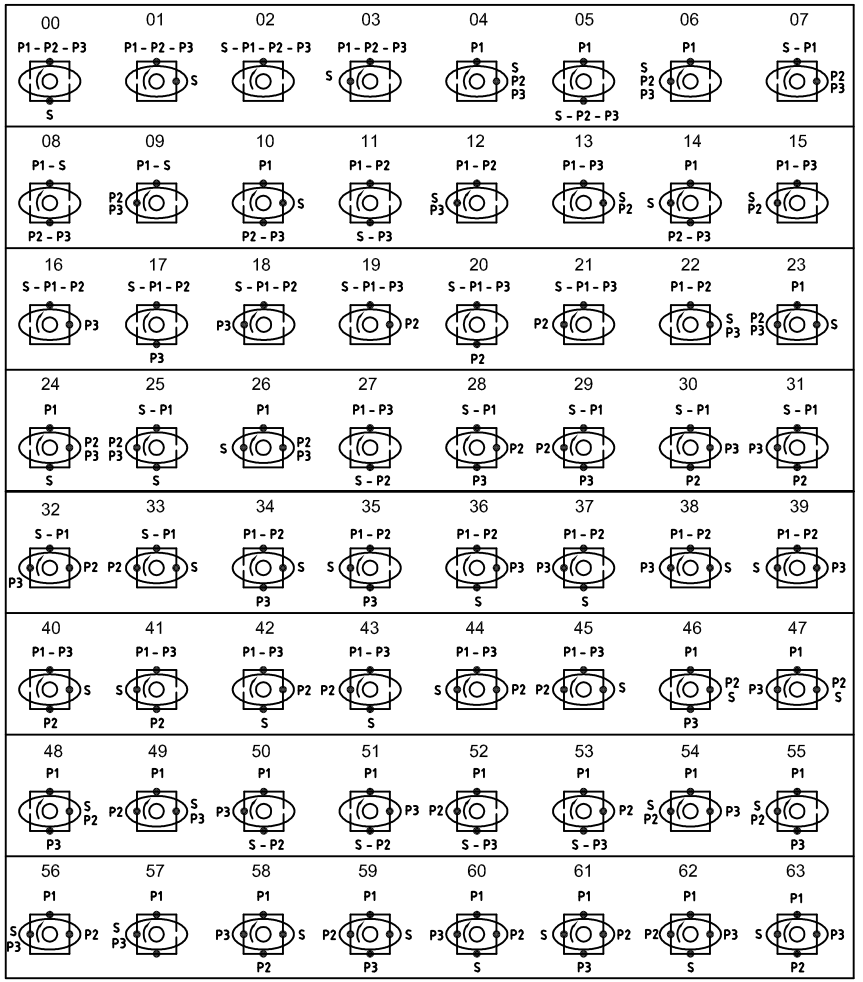

MODEL CODE

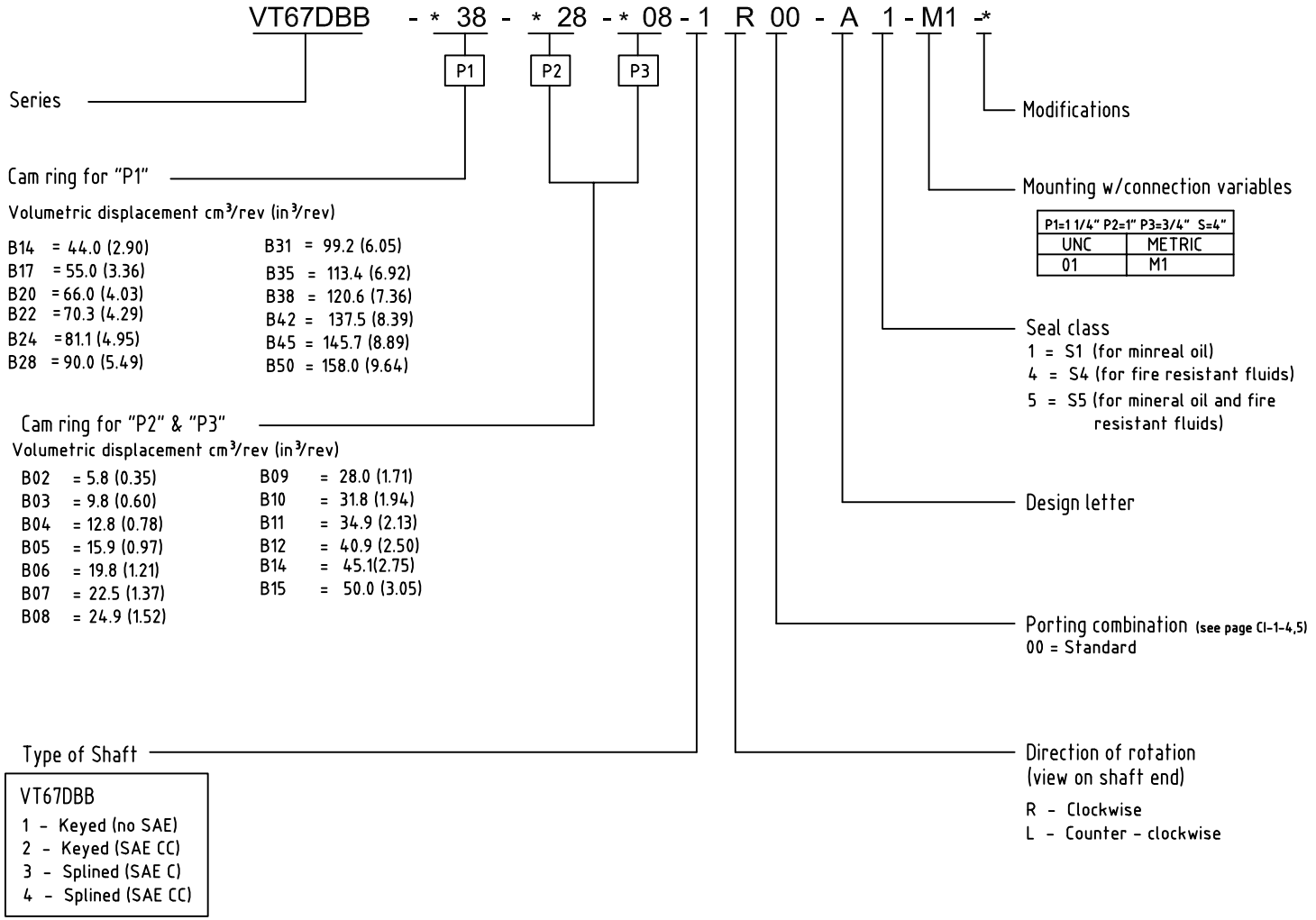

Veljan Hydrair Limited , Balanagar , Hyderabad - 500 037 , INDIA . Phone : ++91 40 3772794,95 FAX : ++91 40 3773963 , E-mail :

Rights of alteration reserved

Print	
Replace	——
Revision	——

Printed in India