Radial piston hydraulic motor Hägglunds CBm

RE 15300
Edition: 06.2018
Replace: 08.2016

- Torque range: up to 1970 kNm [up to 1452717 lb-ft]
- Speed:range: up to 70 rpm
- Power range: up to 2393 kW
- Maximum operating pressure: 350 bar [5076 psi]
- Frame size: 2000, 3000, 4000, 5000 and 6000
- Displacement: 63108 to 380178 cm3/rev
  [3851 to 23200 in3/rev]
- Specific torque: 1000 to 6 000 Nm/bar
  [50 853 to 305 119 ft-lbs/1000 psi]

Features

- High power density
- High torque density
- Energy efficient
- Flexible, many sizes, few mechanical interfaces.
- Insensitive for shock loads
- Very low moment of inertia
- Small footprint (total occupied volume)
- Freewheeling possibility
- Through hole diameter 270 mm
- Tandem mounting possibilty
- Version with shrink disc coupling available for CBM 2000 to CBM 3000, which gives direct and easy retrofit for Hägglunds MB 1600 and MB 2400 motors

Contents

1 Ordering code 2
2 Functional description 4
3 Fluid connections 5
4 Technical data 7
5 Type of seal 45
6 Increased robustness 45
7 Through hole kit 46
8 Dimensions / Interface 47
9 Mounting alternatives 52
10 Accessories 58
11 Circuit design 70
12 Related documents 72

1 Ordering code

In order to identify Hägglunds equipment exactly, the following ordering code is used. These ordering codes should be stated in full in all correspondence e.g. when ordering spare parts. Example Hägglunds CBm motor:

CB	M		2000		1200		S	A	0	N	0	A		00		00
01	02		03		04		05	06	07	08	09	10		11*		12*

01	**Motor series**	
	Compact	**CB**

02	**Type**	
	Magnum	**M**

03	**Frame size**	
	CBM 2000	**2000**
	CBM 3000	**3000**
	CBM 4000	**4000**
	CBM 5000	**5000**
	CBM 6000	**6000**

04	**Nominal size , specific torque, Nm/bar** *(see section 4.3)*						
	Frame size 2000	**1000**	**1200**	**1400**	**1600**	**1800**	**2000**
		●	●	●	●	●	●
	Frame size 3000		**2200**	**2400**	**2600**	**2800**	**3000**
			●	●	●	●	●
	Frame size 4000		**3200**	**3400**	**3600**	**3800**	**4000**
			●	●	●	●	●
	Frame size 5000					**4600**	**5000**
						●	●
	Frame size 6000					**5600**	**6000**
						●	●

05	**Mounting alternatives, shaft**	**E Shrink disc coupling Ø 340 mm**	**C Shrink disc coupling Ø 360 mm**	**S Splines DIN 5480 N**
	CBM 2000	●	●	●
	CBM 3000	–	●	●
	CBM 4000	–	–	●
	CBM 5000	–	–	●
	CBM 6000	–	–	●

06	**Prepared for brake or tandem kit** *(see section 10.3)*		
	Motor not prepared for TA kit	●	**A**
	Motor prepared for TA kit	●	**B**

07	**Displacement shift valve**	
	Motor not prepared for displacement shift	**0**

08	**Type of seal** *(see section 5)*		
	NBR (Nitrile)	●	**N**
	FPM (Viton)	●	**V**

09	**Through hole kit** *(see section 7)*		
	No	●	**0**
	Yes	●	**H**

10	**Increased robustness** *(see section 6)*		
	No	●	**A**
	Yes	●	**C**

11	**Modification** *)	
		01

12	**Design**	
	Standard	**00**
	Special index *)	**01-99**

● = Available – Not available

*) To be filled in by Bosch Rexroth DC-IA/ENG

2 Functional description

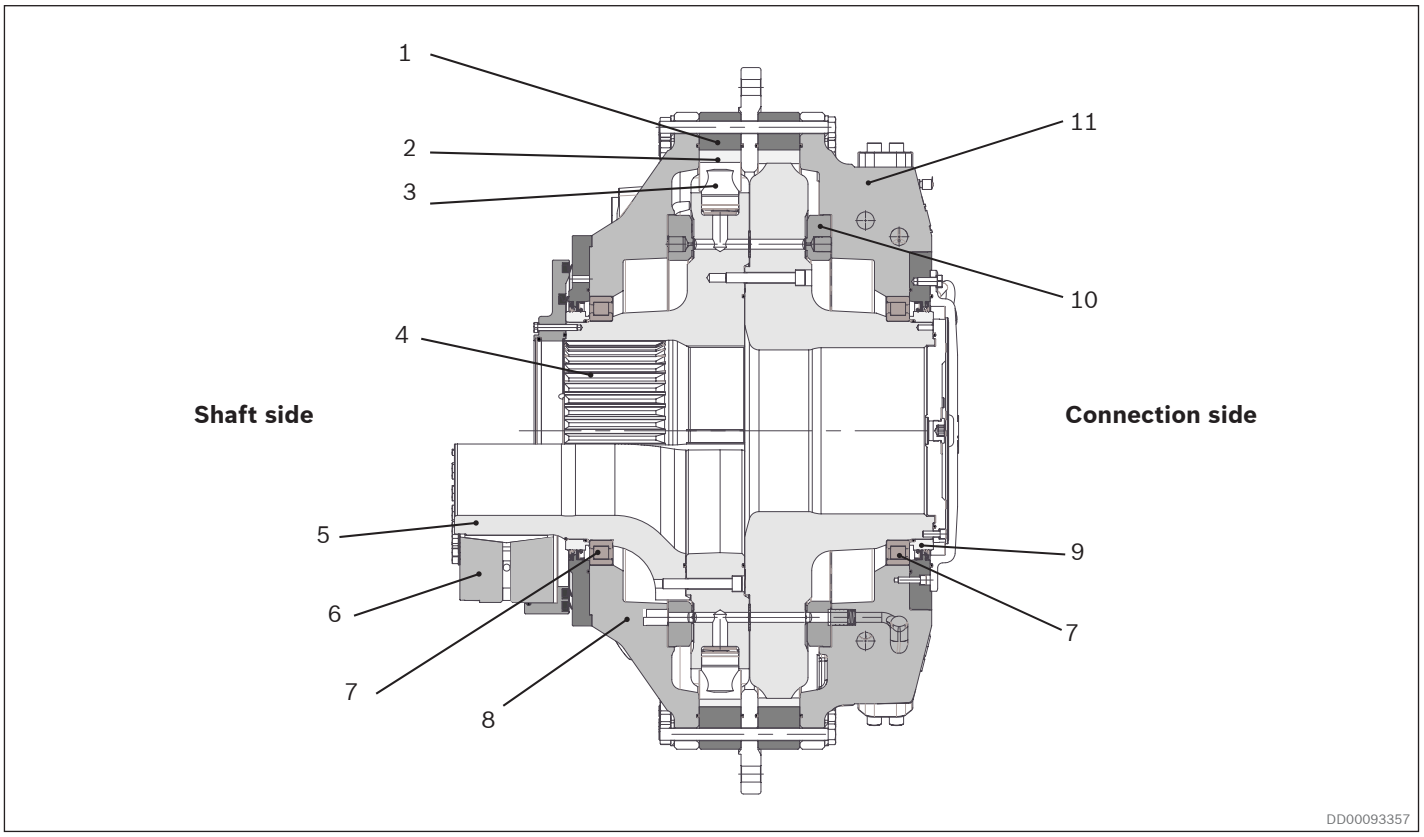

Fig.1: Section view of radial piston hydraulic motor

1. Cam ring	**6.** Shrink disc
2. Cam roller	**7.** Cylindrical roller bearing
3. Piston	**8.** Housing cover
4. Cylinder block, spline	**9.** Wear ring
5. Cylinder block, hollow shaft	**10.** Distributor
	11. Connection housing

Bosch Rexroth's hydraulic industrial motor Hägglunds CBm is of the radial piston type with a rotating cylinder block/ hollow shaft and a stationary housing. The cylinder block is mounted in fixed roller bearings in the housing. An even number of pistons are radially located in bores inside the cylinder block, and the distributor directs the incoming and outgoing oil to and from the working pistons. Each piston is working against a cam roller.

When the hydraulic pressure is acting on the pistons, the cam rollers are pushed against the slope on the cam ring that is rigidly connected to the housing, thereby producing a torque. The cam rollers transfer the reaction force to the pistons which are guided in the cylinder block. Rotation therefore occures, and the torque available is proportional to the pressure in the system.

Oil main lines are connected to ports A1 and C1 in the connection block and drain lines to one of the D-ports in the motor housing.

The motor is connected to the shaft of the driven machine through the hollow shaft or spline of the cylinder block.

Quality

To assure our quality we maintain a Quality Assurance System, certified to standard ISO 9001.

3 Fluid connections

3.1 Hydraulic symbol

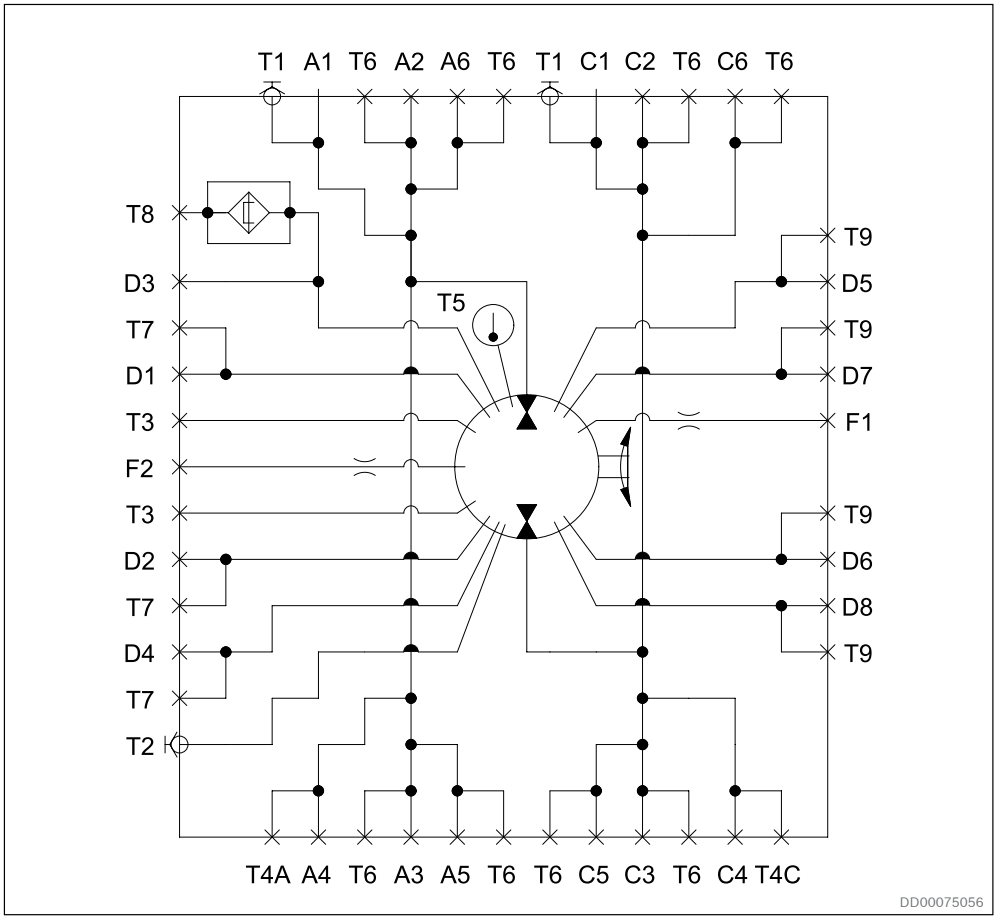

Fig. 2: Hydraulic symbol

Port locations and dimensions, *see Table 1: Port dimensions*

3.2 Port connections

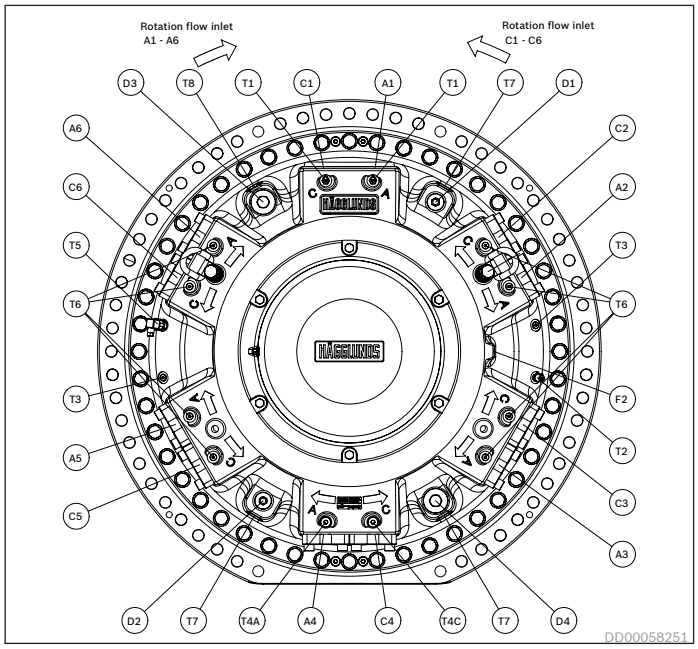

Fig. 3: **Connection side of the motor**

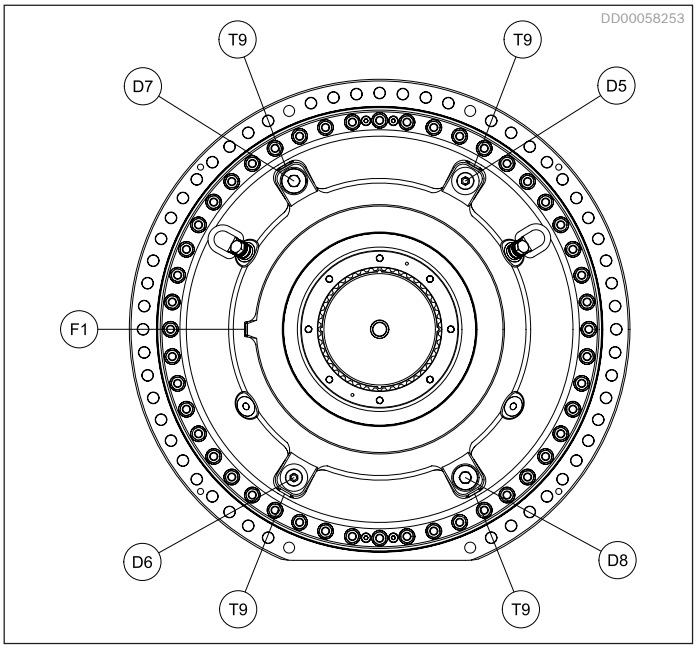

Fig. 4: Shaft side of the motor

Table 1: Port dimensions

Connection	Description	Dimensions	Remarks
C1	Main connection	2“ *	If C is used as the inlet, the motor shaft rotates clockwise, viewed from the motor shaft side.
C2, C3, C4, C5, C6	Alternative main connection	2“ *	Normally plugged at delivery.
A1	Main connection	2“ *	If A is used as the inlet, the motor shaft rotates counterclockwise, viewed from the motor shaft side.
A2, A3, A4, A5, A6	Alternative main connection	2“ *	Normally plugged at delivery.
D3	Drain outlet	G 2“	Normally plugged at delivery.
D1, D2, D5, D6	Alternative drain outlets / or flushing inlet	G 1 1/4“	Normally plugged at delivery.
D4, D7, D8	Alternative drain outlets / or flushing inlet	G 2“	Normally plugged at delivery.
F1, F2	Flushing connections	G 1/4“	For flushing of radial lip seal. Normally plugged.
T1	Test connection	M16 x 2	Used to measure pressure and/or temperature at the main connections.
T2	Test connection	M16 x 2	Used to measure case pressure and/or temperature in case drain oil.
T3	Test connection	G 1/4“	Normally plugged at delivery.
T4A, T4C	Pressure connection	G 1/2“	Connection for double ended torque arm.
T5	Temperatur sensor PT100	G 1/4“	Used to measure temperature in the housing.
T6	Alternative test connection or pressure connection	G 1/4“	Normally plugged at delivery.
T8	Magnetic plug	1 1/16-12-UN-2B	Used to monitor impurities in the oil.
T7, T9	Alternative magnetic plug connection	1 1/16-12-UN-2B	Normally plugged at delivery.

*SAE flange J 518 , code 62, 420 bar (6000 psi).

4 Technical data

4.1 Calculation fundamentals

Table 2: Calculation fundamentals.

	Metric		US	
Output power	$P=\frac{T \cdot n}{9549}$	(kW) on driven shaft	$P=\frac{T \cdot n}{5252}$	(hp) on driven shaft
Output torque (η_m=98%)	$T=T_s \cdot (p-\Delta p_l-p_c) \cdot \eta_m$	(Nm)	$T=\frac{T_s \cdot (p-\Delta p_l-p_c) \cdot \eta_m}{1000}$	(ibf·ft)
Pressure required (η_m=98%)	$p=\frac{T}{T_s \cdot \eta_m}+\Delta p_l+p_c$	(bar)	$p=\frac{T \cdot 1000}{T_s \cdot \eta_m}+\Delta p_l+p_c$	(psi)
Flow rate required	$q=\frac{n \cdot V_i}{1000}+q_l$	(l/min)	$q=\frac{n \cdot V_i}{231}+q_l$	(gpm)
Output speed	$n=\frac{q-q_l}{V_i} \cdot 1000$	(rpm)	$n=\frac{q-q_l}{V_i} \cdot 231$	(rpm)
Inlet power	$P_{in}=\frac{q \cdot (p-p_c)}{600}$	(kW)	$P_{in}=\frac{q \cdot (p-p_c)}{1714}$	(hp)

Quantity	Symbol		Metric	US
Power	P	=	kW	hp
Output torque	T	=	Nm	lbf·ft
Specific torque	T_s	=	Nm/bar	lbf·ft/1000 psi
Rotational speed	n	=	rpm	rpm
Required pressure	p	=	bar	psi
Pressure loss	Δp_l	=	bar	psi
Charge pressure	p_c	=	bar	psi
Flow rate required	q	=	l/min	gpm
Total volumetric loss	q_l	=	l/min	gpm
Displacement	V_i	=	cm^3/rev	in^3/rev
Mechanical efficiency	η_m	=	0,98 [1)]	

[1)] Not valid for starting efficiency

4.2 General data

Table 3: General data (metric)

			Frame size				
			CBm 2000	**CBm 3000**	**CBm 4000**	**CBm 5000**	**CBm 6000**
Type of mounting			See section *9: Mounting alternatives*				
Port connections			See section *3.2: Port connections*				
External loads			See section *4.14: Permissible external loads*				
Hydraulic fluids			See section *4.5: Hydraulic fluids*				
Pressure							
	Maximum operating pressure	bar	350 [3]	350 [3]	350	350	350
	Maximum peak pressure [1]	bar	420	420	420	420	420
	Charge pressure	bar	See section *4.4: Recommended charge pressure*				
	Maximum case pressure	bar	3	3	3	3	3
	Maximum case peak pressure [2]	bar	8	8	8	8	8
Temperature limits of case drain oil Seal type: NBR (Nitrile)							
	Minimum	°C	-35	-35	-35	-35	-35
	Maximum	°C	+70	+70	+70	+70	+70
Seal type: FPM (Viton)							
	Minimum	°C	-20	-20	-20	-20	-20
	Maximum	°C	+100	+100	+100	+100	+100
Oil volume in motor case		l	50	60	70	80	90
Moment of inertia for rotary group							
	Motor with splines	kg·m^2	215	322	415	499	593
	Motor with shrink disc coupling C	kg·m^2	262	359	-	-	-
	Motor with shrink disc coupling E	kg·m^2	246	-	-	-	-
Weight							
	Motor with splines	kg	4100	5000	5800	6700	7500
	Motor with shrink disc coupling C	kg	4650	5500	-	-	-
	Motor with shrink disc coupling E	kg	4500	-	-	-	-

[1] Peak pressure 420 bar maximum, allowed to occur up to 10 000 times.

[2] Momentary pressure spikes t< 0.1 s of up to 8 bar are permitted.

[3] Pressure limitations in some nominal motor sizes see *Table 5*

Table 4: General data (US)

			Frame size				
			CBm 2000	**CBm 3000**	**CBm 4000**	**CBm 5000**	**CBm 6000**
Type of mounting			See section 9*: Mounting alternatives*				
Port connections			See section *3.2: Port connections*				
External loads			See section *4.14: Permissible external loads*				
Hydraulic fluids			See section *4.5: Hydraulic fluids*				
Pressure							
	Maximum operating pressure	psi	5076 [3)]	5076 [3)]	5076	5076	5076
	Maximum peak pressure [1)]	psi	6091	6091	6091	6091	6091
	Charge pressure	psi	See section *4.4: Recommended charge pressure*				
	Maximum case pressure	psi	44	44	44	44	44
	Maximum case peak pressure [2)]	psi	116	116	116	116	116
Temperature limits of case drain oil Seal type: NBR (Nitrile)							
	Minimum	°F	-31	-31	-31	-31	-31
	Maximum	°F	+158	+158	+158	+158	+158
Seal type: FPM (Viton)							
	Minimum	°F	-4	-4	-4	-4	-4
	Maximum	°F	+212	+212	+212	+212	+212
Oil volume in motor case		US gal	13,2	15,8	18,5	21,1	23,8
Moment of inertia for rotary group							
	Motor with splines	lb·ft²	5102	7642	9848	11841	14072
	Motor with shrink disc coupling C	lb·ft²	6217	8519	-	-	-
	Motor with shrink disc coupling E	lb·ft²	5838	-	-	-	-
Weight							
	Motor with splines	lb	9050	11000	12800	14750	16550
	Motor with shrink disc coupling C	lb	10250	12100	-	-	-
	Motor with shrink disc coupling E	lb	9900	-	-	-	-

1) Peak pressure 6091 psi maximum, allowed to occur up to 10 000 times.

2) Momentary pressure spikes t< 0.1 s of up to 116 psi are permitted

3) Pressure limitations in some nominal motor sizes see *Table 5*

4.3 Motor data

Table 5: Specific data, metric

Frame size	Nominal size	Specific torque	Displacement	Maximum torque [1]	Maximum speed	Maximum operating pressure [2]	Maximum operating power [3]
		Nm/bar	cm3/rev	kNm	rpm	*p* bar	kW
CBm 2000 S	1000	1000	63108	328	70	350	2393
	1200	1200	75832	394	58	350	2384
	1400	1400	88301	460	48	350	2301
	1600	1600	100770	525	41	350	2247
	1800	1800	113748	591	36	350	2227
	2000	2000	126726	657	32	350	2207
CBm 2000 C	1000	1000	63108	328	70	350	2393
	1200	1200	75832	394	58	350	2384
	1400	1400	88301	460	48	350	2301
	1600	1600	100770	525	41	350	2247
	1800	1800	113748	591	36	350	2227
	2000	2000	126726	657	32	350	2207
CBm 2000 E	1000	1000	63108	328	70	350	2393
	1200	1200	75832	394	58	350	2384
	1400	1400	88301	460	48	350	2301
	1600	1600	100770	525	41	350	2247
	1800	1800	113748	520	36	310 [4]	1957
	2000	2000	126726	519	32	280 [4]	1738
CBm 3000 S	2200	2200	138686	722	29	350	2184
	2400	2400	151155	788	26	350	2134
	2600	2600	164133	854	24	350	2137
	2800	2800	177111	919	22	350	2119
	3000	3000	190089	985	20	350	2068
CBm 3000 C	2200	2200	138686	722	29	350	2184
	2400	2400	151155	788	26	350	2134
	2600	2600	164133	777	24	320 [4]	1942
	2800	2800	177111	782	22	300 [4]	1797
	3000	3000	190089	779	20	280 [4]	1628
CBm 4000 S	2000	3200	201540	1051	18	350	1981
	3400	3400	214518	1116	17	350	1991
	3600	3600	227496	1182	16	350	1987
	3800	3800	240474	1248	15	350	1970
	4000	4000	253452	1313	14	350	1939
CBm 5000 S	4600	4600	290859	1510	12	350	1907
	5000	5000	316815	1642	11	350	1903
CBm 6000 S	5600	5600	354222	1838	9	350	1746
	6000	6000	380178	1970	9	350	1871

[1] Calculated as: Metric= Ts • (350-15) • 0,98

[2] The motors are designed according to DNV-rules. Test pressure 420 bar. Peak pressure 420 bar maximum , allowed up to 10 000 times.

[3] Flushing of motor case is required. See section *4.10: Flushing*

[4] **Note!** Max pressure <350 bar

Table 6: Specific data, US

Frame size	Nominal size	Specific torque	Displacement	Maximum torque [1]	Maximum speed	Maximum operating pressure [2]	Maximum operating power [3]
		lbf·ft/1000 psi	in3/rev	lbf·ft	rpm	*p* psi	hp
CBm 2000 S	1000	50853	3851	241920	70	5000	3209
	1200	61024	4628	290599	58	5000	3197
	1400	71194	5388	339278	48	5000	3086
	1600	81365	6149	387219	41	5000	3013
	1800	91536	6941	435899	36	5000	2986
	2000	101706	7733	484578	32	5000	2960
CBm 2000 C	1000	50853	3851	242120	70	5000	3209
	1200	61024	4628	290543	58	5000	3197
	1400	71194	5388	338967	48	5000	3086
	1600	81365	6149	387391	41	5000	3013
	1800	91536	6941	435815	36	5000	2986
	2000	101706	7733	484239	32	5000	2960
CBm 2000 E	1000	50853	3851	242120	70	5000	3209
	1200	61024	4628	290543	58	5000	3197
	1400	71194	5388	338967	48	5000	3086
	1600	81365	6149	387391	41	5000	3013
	1800	91536	6941	383532	36	4500 [4]	2624
	2000	101706	7733	382794	32	4100 [4]	2331
CBm 3000 S	2200	111877	8463	532519	29	5000	2929
	2400	122047	9224	581198	26	5000	2862
	2600	132218	10016	629877	24	5000	2866
	2800	142389	10808	677819	22	5000	2842
	3000	152559	11600	726498	20	5000	2773
CBm 3000 C	2200	111877	8463	532519	29	5000	2929
	2400	122047	9224	581198	26	5000	2862
	2600	132218	10016	573085	24	4600 [4]	2604
	2800	142389	10808	576773	22	4400 [4]	2410
	3000	152559	11600	574560	20	4100 [4]	2183
CBm 4000 S	3200	162730	12299	775176	18	5000	2657
	3400	172901	13091	823118	17	5000	2670
	3600	183071	13883	871630	16	5000	2665
	3800	193242	14675	920476	15	5000	2642
	4000	203412	15467	968418	14	5000	2600
CBm 5000 S	4600	233924	17749	1113717	12	5000	2557
	5000	254266	19333	1211075	11	5000	2552
CBm 6000 S	5600	284777	21616	1355637	9	5000	2341
	6000	305119	23200	1452995	9	5000	2509

1) Calculated as: US= Ts • (5076-215) • 0,98

2) The motors are designed according to DNV-rules. Test pressure 6000 psi. Peak pressure 6000 psi maximum , allowed up to 10 000 times.

3) Flushing of motor case is required. See section *4.10: Flushing*

4) **Note!** Max pressure <5000 psi

4.4 Recommended charge pressure

The hydraulic system must be such that the motor will recieve sufficient charge pressure at the low pressure port. This applies to all types of installations.

4.4.1 The motor working in driving mode only

For CBm 2000 - CBm 6000. The pressure at the low pressure port, should, during operation of the motor, be at least one bar above the case pressure independent of numbers of ports that are connected. Two cases to be considered:

Case 1: No shock loads.

Required charge pressure = case pressure + 1 bar during operation, but shall not be below 2 bar (29 psi)

Case 2: With shock loads.

Required charge pressure at the **outlet** port corresponds to 30% of value given in diagram. See *Fig. 5.and Fig. 6*

4.4.2 The motor working in braking mode

Required charge pressure at the **inlet** port is according to diagram. See *Fig. 5 and Fig. 6.*

Notice!

The diagrams is valid for 1 bar (14,5 psi) case pressure. With increasing case pressure the charge pressure must be increased accordingly.

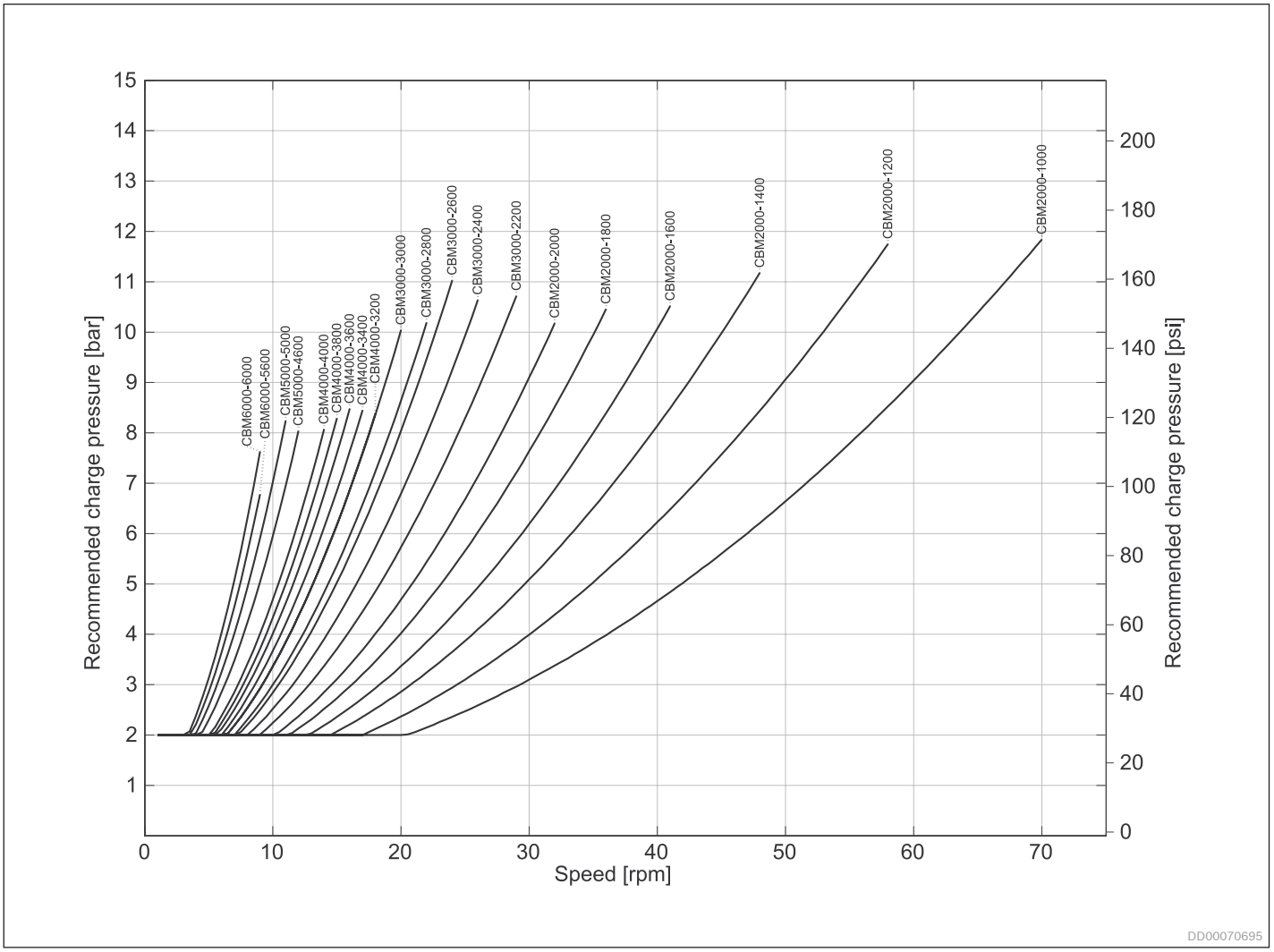

Fig. 5: Recommended charge pressure for motor workning in braking mode, Hägglunds CBm 4-port connection. Valid for oil viscosity 40 cSt.

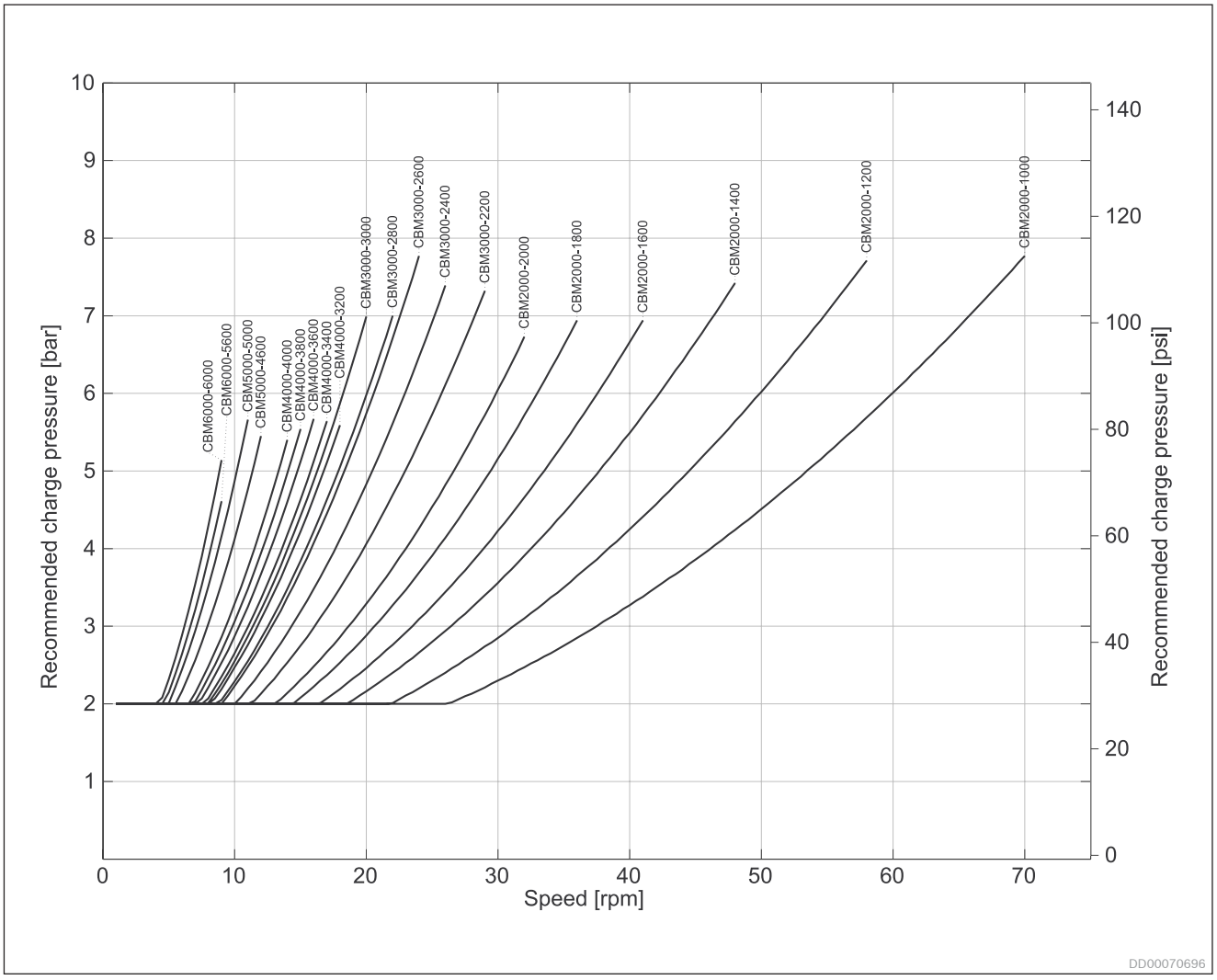

Fig. 6: Recommended charge pressure for motor workning in braking mode, Hägglunds CBm 8-port connection. Valid for oil viscosity 40 cSt.

4.5 Hydraulic fluids

The hydraulic motor Hägglunds CBm is primarily designed for operation with hydraulic fluids according to ISO 11158 HM. Before the start of project planning, see data sheet RE 15414, Hydraulic fluid quick reference, for detailed information on hydraulic fluids and specific additional demands.

Table 7: Applicable fluids

ISO 11158	ISO 15380	ISO 12922
Mineral oil based and mineral oil related hydraulic fluids	Environmentally acceptable hydraulic fluids	Fire resistant hydraulic fluids

Within these standards, not all fluid classes are allowed, some are recommended, and there are also additional demands (see data sheet RE 15414).

Filtration of the hydraulic fluid

A contamination level better than 18/16/13 according to ISO 4406 is required.

The less contamined the fluid, the longer the service life of the hydraulic motor.

Details regarding the selection of hydraulic fluid

The hydraulic fluid should be selected such that the operating viscosity in the temperature range, as measured in the motor housing, is within optimum operation range, see *Fig. 7: Selection diagram for viscosity ranges with straight fluids, i.e. viscosity index 100*. General recommendation is to have a system temperature of 50°C, see dotted line in fig. 65. An ISO VG 68 fluid will render just above 40 cSt at this point.

- Optimum viscosity range is 40 to 150 cSt.
- Running above 150 cSt or below 40 cSt results in reduced efficiency.
- Running above 400 cSt results in substantial efficiency loss.
- Starting at above 10000 cSt imparts unnecessary strain on parts.
- Running below 30 cSt may impact service life.
- Running below 20 cSt may render instant seizure.

The operating temperature is also limited by the seal type, see Table 3: *General data (metric) or* Table 4: *General data (US)*.

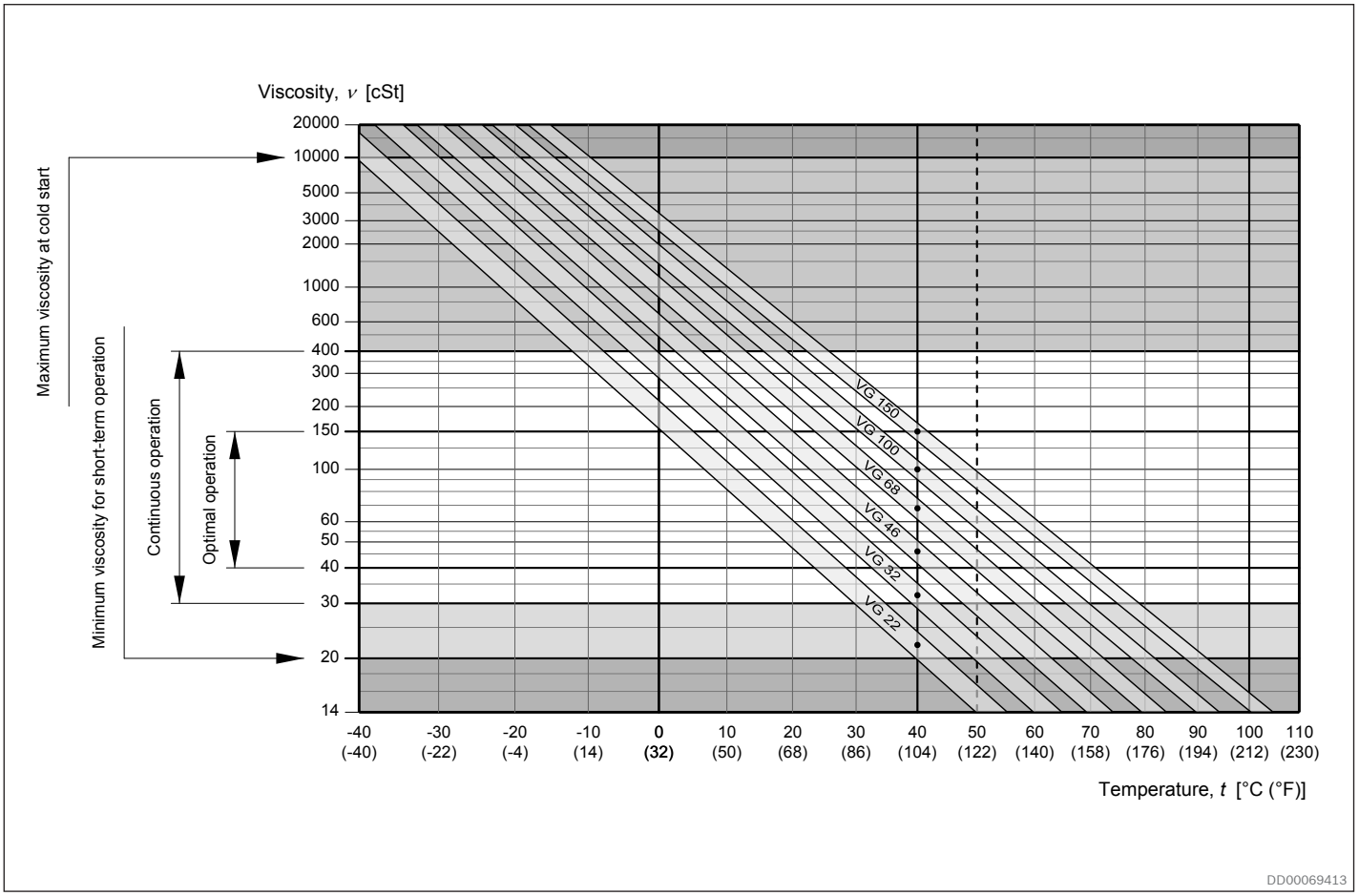

Fig. 7: Selection diagram for viscosity ranges with straight fluids, i.e. viscosity index 100

4.6 Overall efficiency

The diagrams are valid for oil viscosity 40 cSt and low pressure 15 bar (218 psi) at the motor main ports A or C.

Each diagram has the following label definitions:

1. Output power.
2. Overall efficiency.
3. Flushing of motor case is required.

Number of port connections recomended:

2-port for oil flow up to 750 L/min (198 gpm)
4-port for oil flow up to 1500 L/min (396 gpm)
6-port for oil flow up to 2250 L/min (594 gpm)
8-port for oil flow up to 3000 L/min (793 gpm)

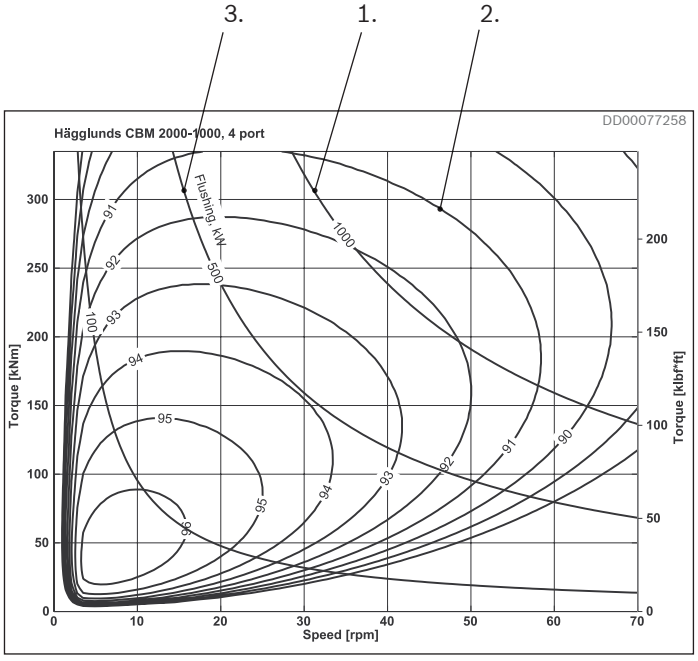

Fig. 8: CBm 2000-1000 4 port connection

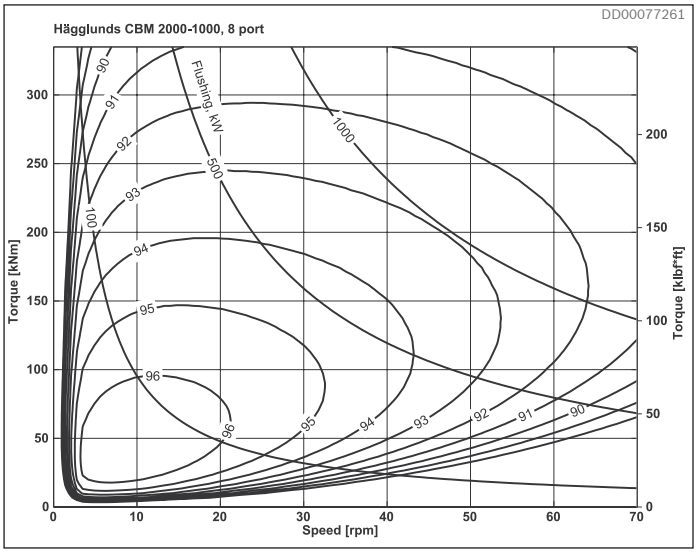

Fig. 9: CBm 2000-1000 8 port connection

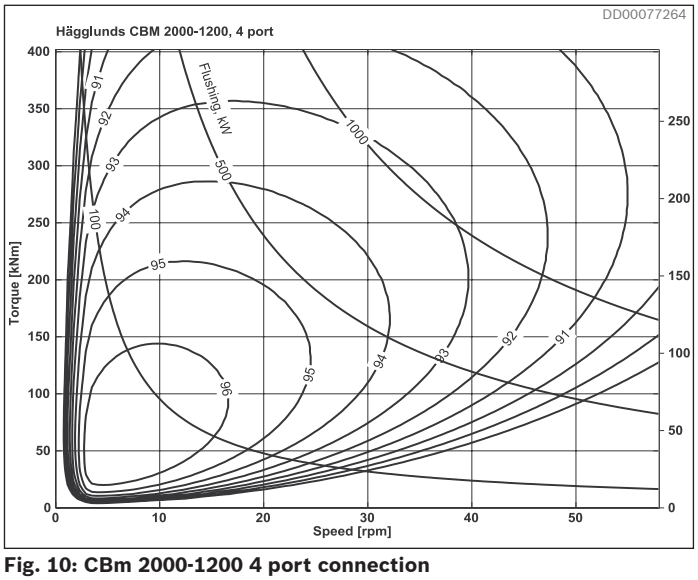

Fig. 10: CBm 2000-1200 4 port connection

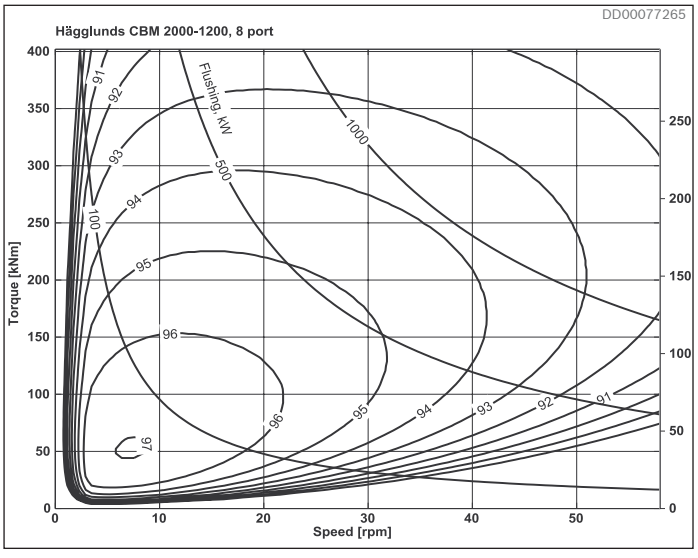

Fig. 11: CBm 2000-1200 8 port connection

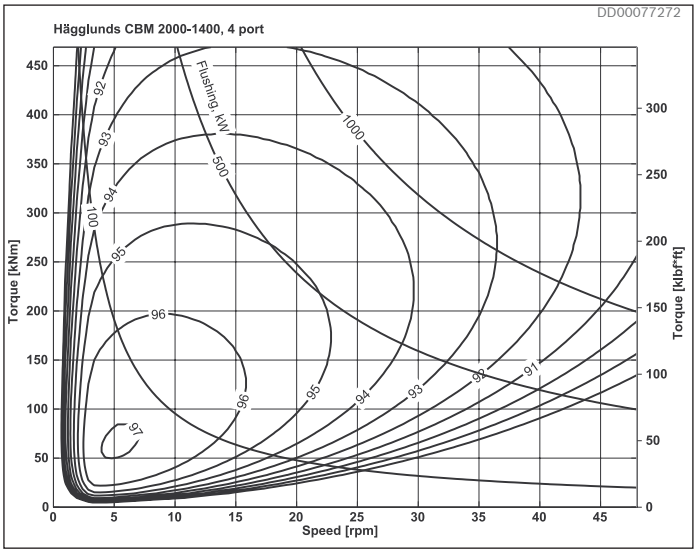

Fig. 12: CBm 2000-1400 4 port connection

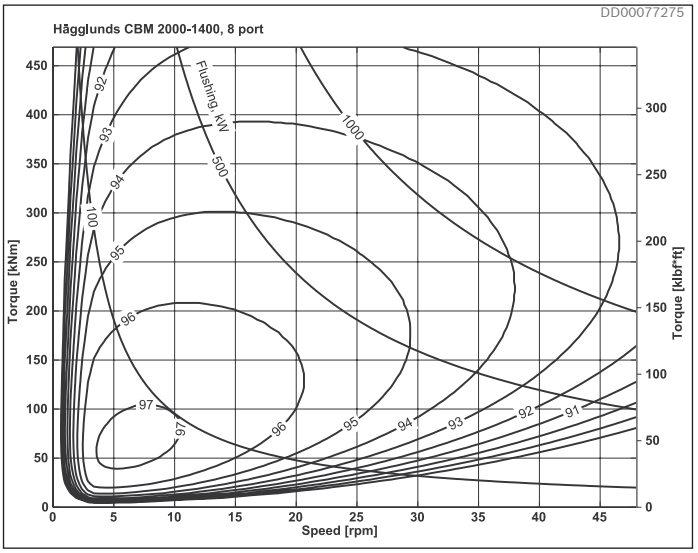

Fig. 13: CBm 2000-1400 8 port connection

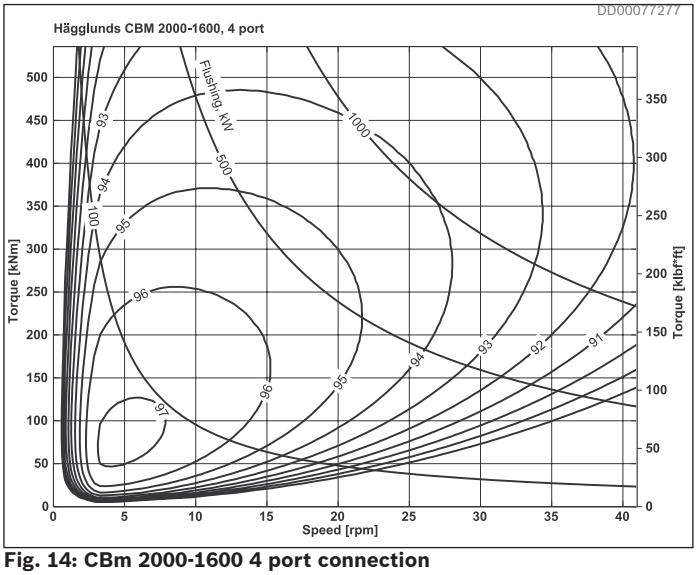

Fig. 14: CBm 2000-1600 4 port connection

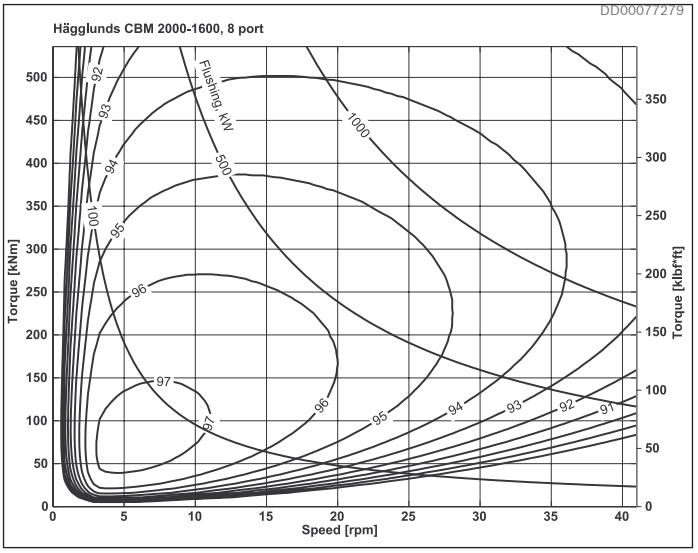

Fig. 15: CBm 2000-1600 8 port connection

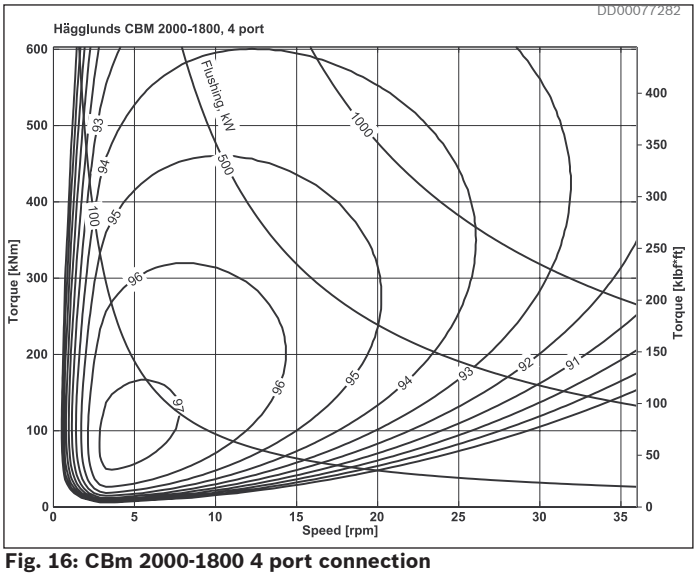

Fig. 16: CBm 2000-1800 4 port connection

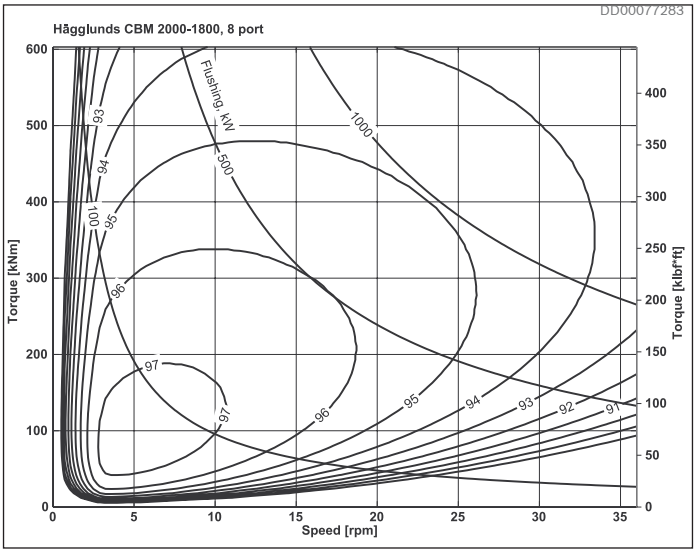

Fig. 17: CBm 2000-1800 8 port connection

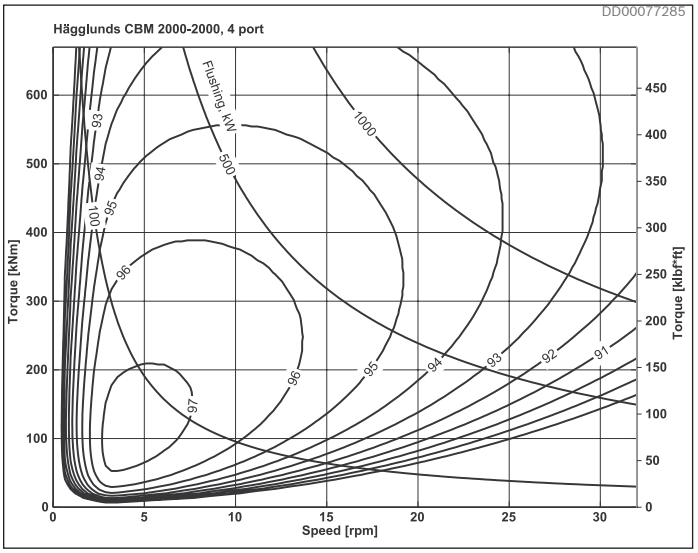

Fig. 18: CBm 2000-2000 4 port connection

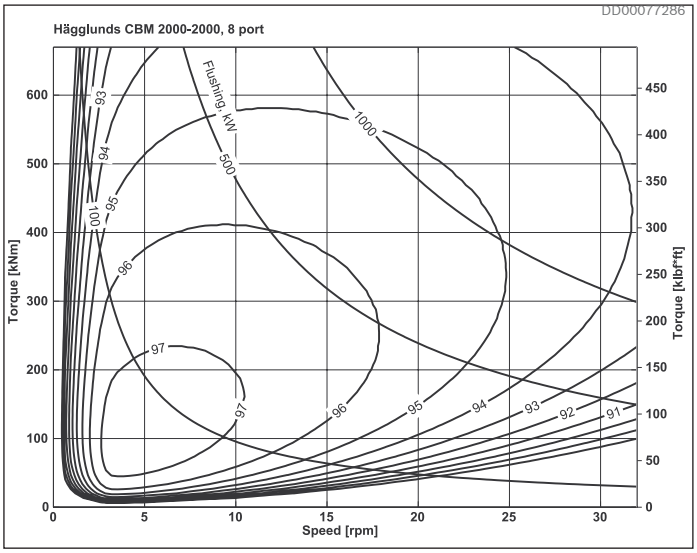

Fig. 19: CBm 2000-2000 8 port connection

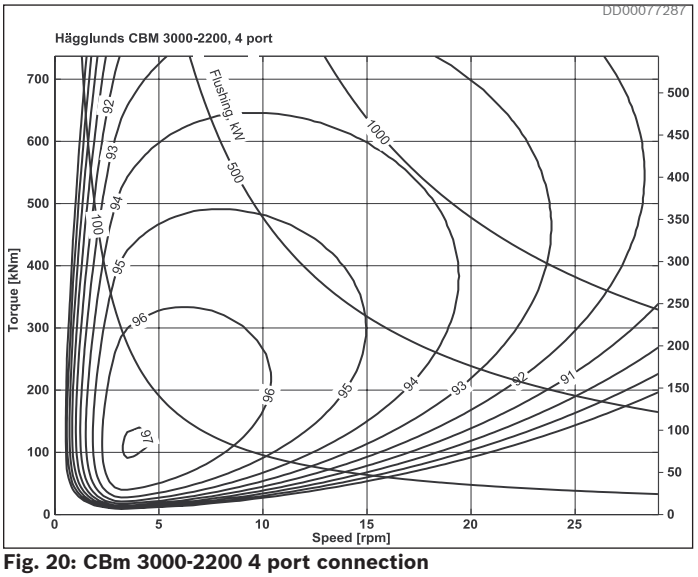

Fig. 20: CBm 3000-2200 4 port connection

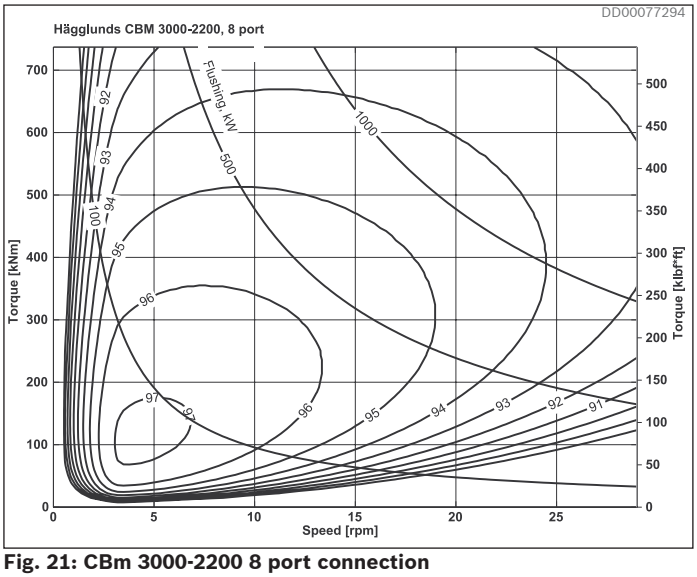

Fig. 21: CBm 3000-2200 8 port connection

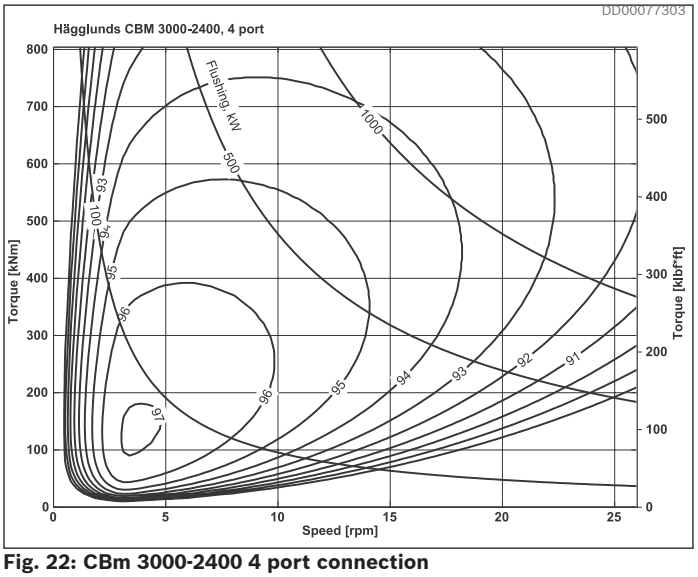

Fig. 22: CBm 3000-2400 4 port connection

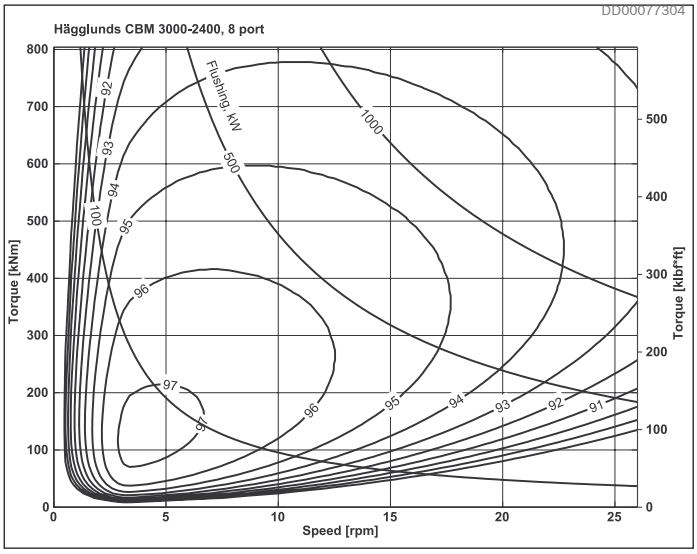

Fig. 23: CBm 3000-2400 8 port connection

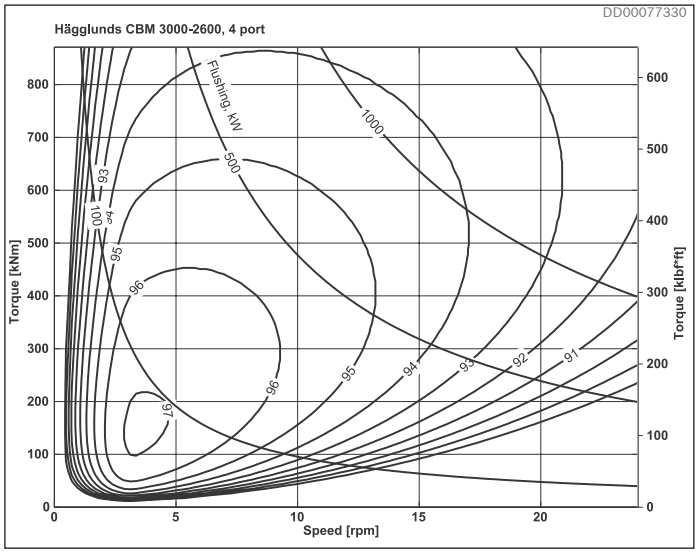

Fig. 24: CBm 3000-2600 4 port connection

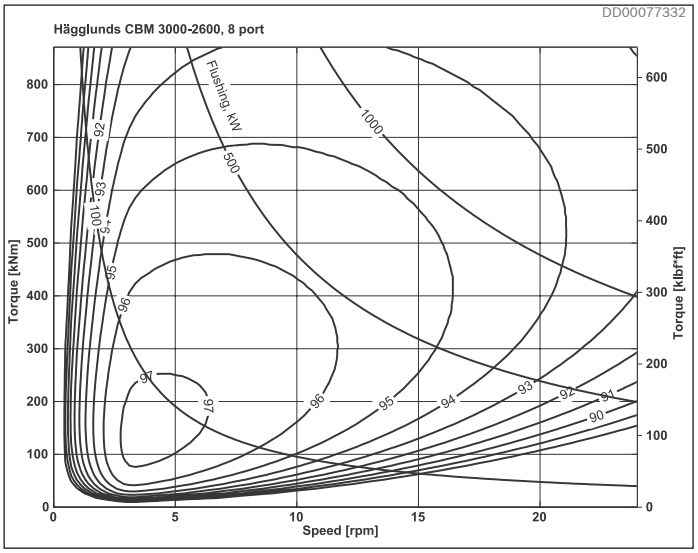

Fig. 25: CBm 3000-2600 8 port connection

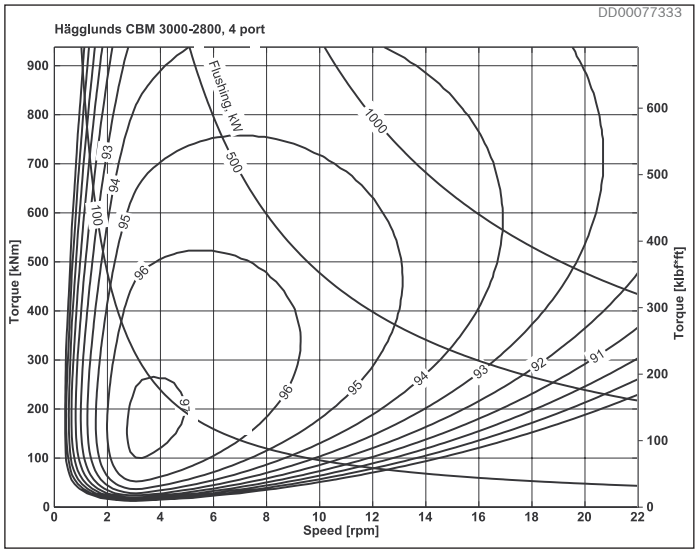

Fig. 26: CBm 3000-2800 4 port connection

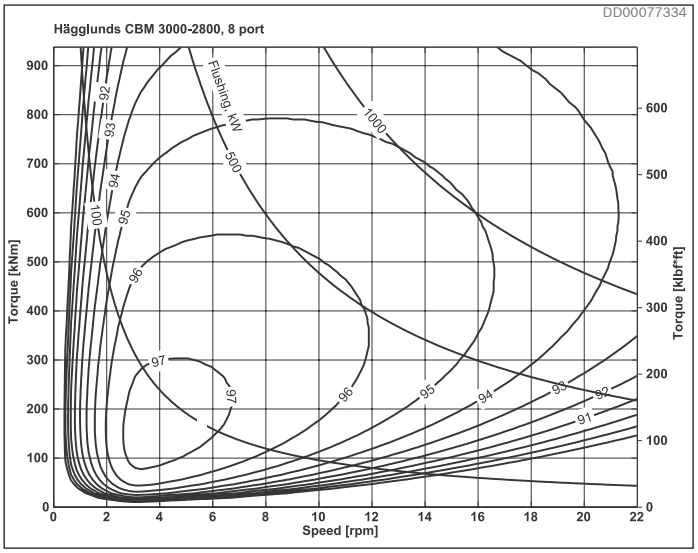

Fig. 27: CBm 3000-2800 8 port connection

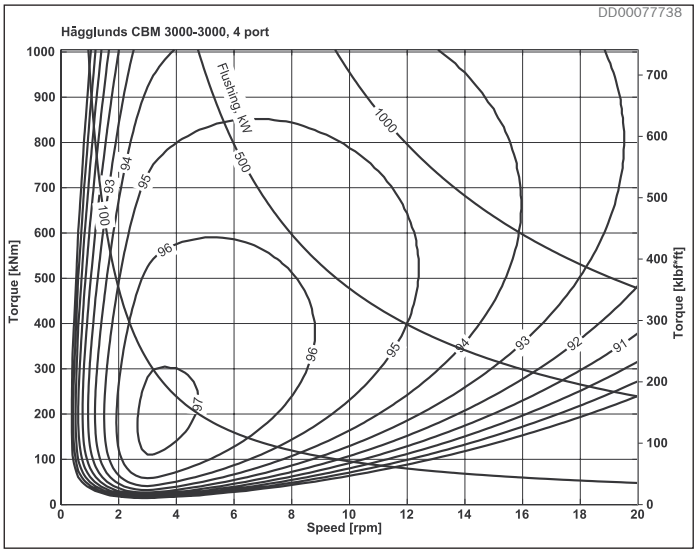

Fig. 28: CBm 3000-3000 4 port connection

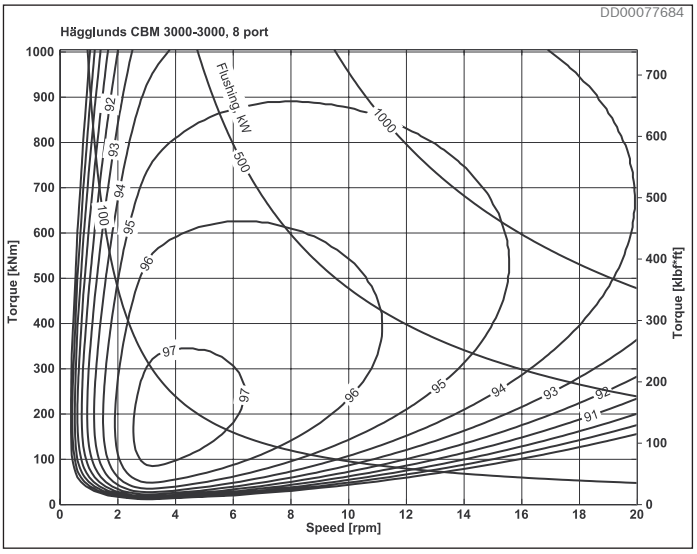

Fig. 29: CBm 3000-3000 8 port connection

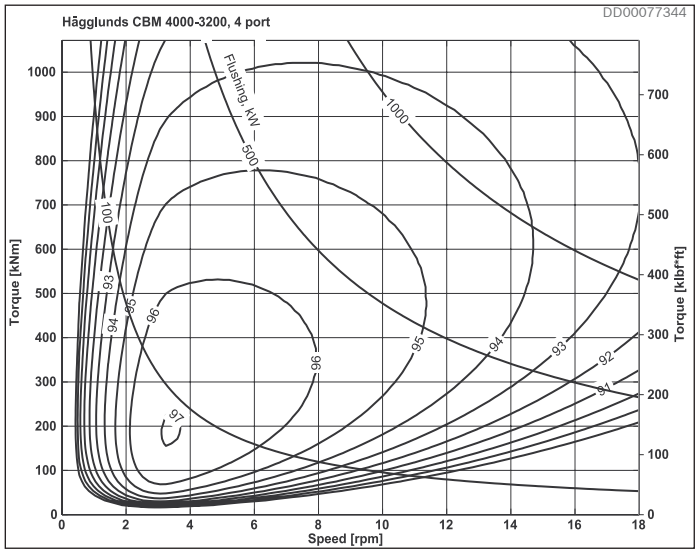

Fig. 30: CBm 4000-3200 4 port connection

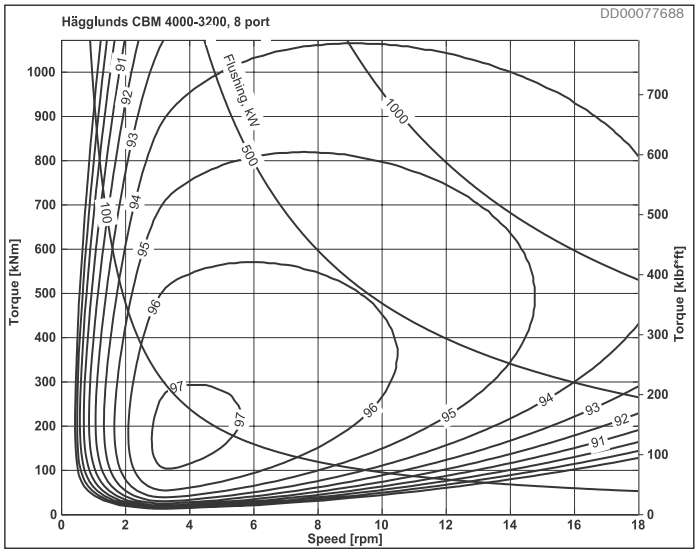

Fig. 31: CBm 4000-3200 8 port connection

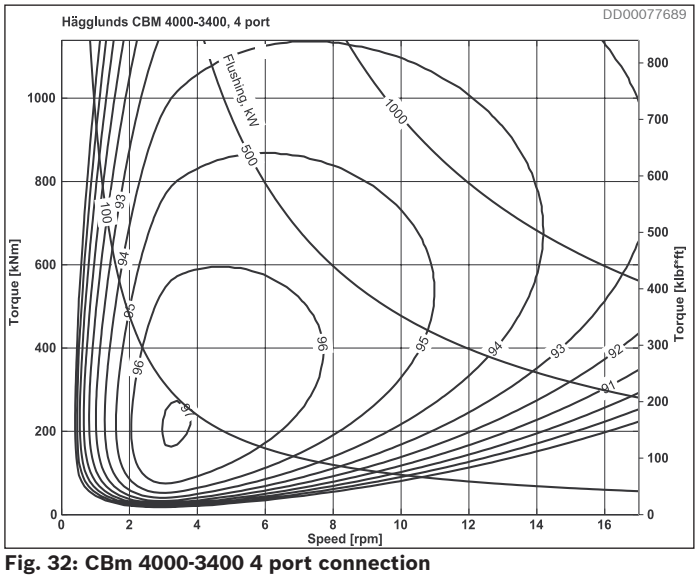

Fig. 32: CBm 4000-3400 4 port connection

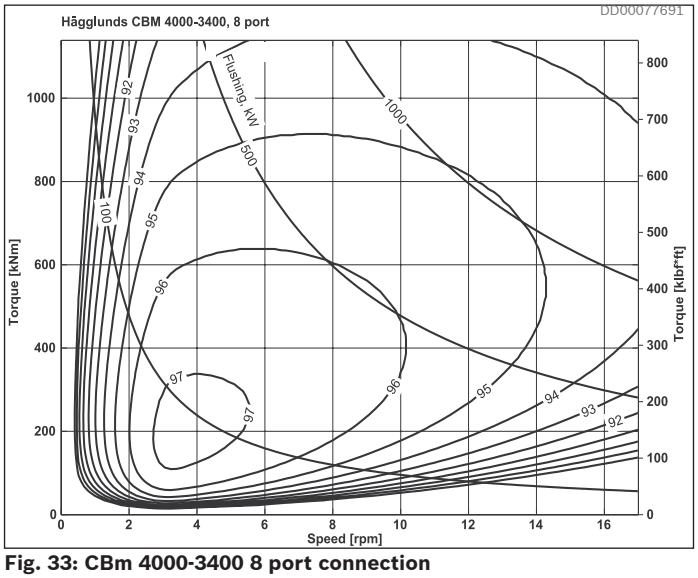

Fig. 33: CBm 4000-3400 8 port connection

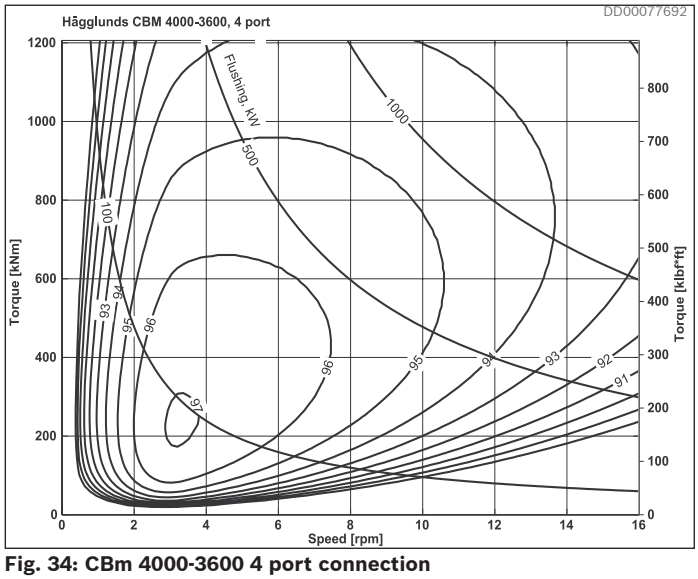

Fig. 34: CBm 4000-3600 4 port connection

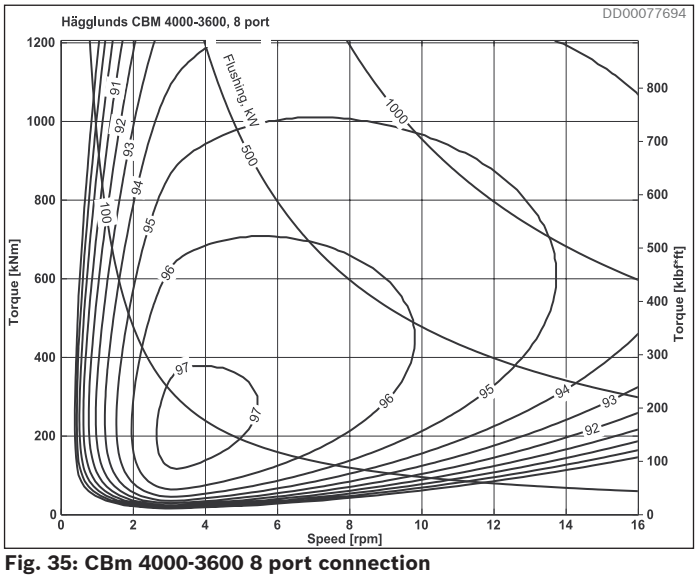

Fig. 35: CBm 4000-3600 8 port connection

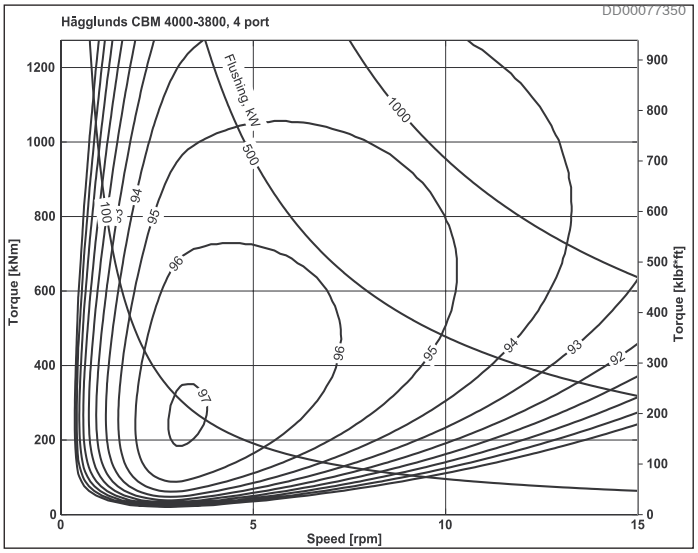

Fig. 36: CBm 4000-3800 4 port connection

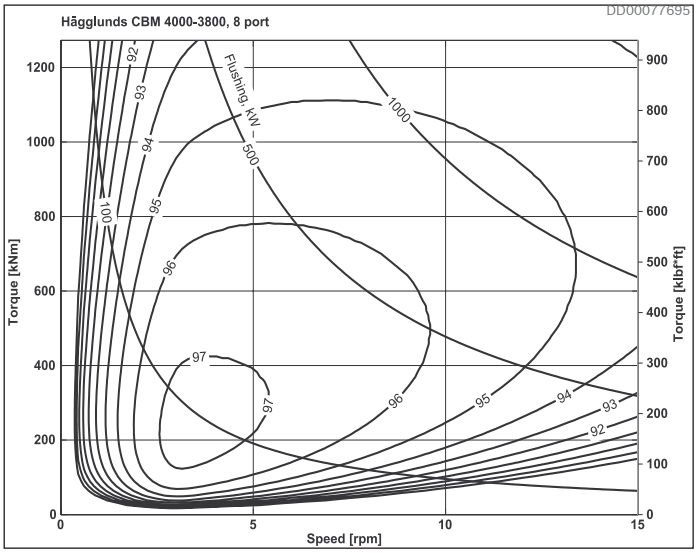

Fig. 37: CBm 4000-3800 8 port connection

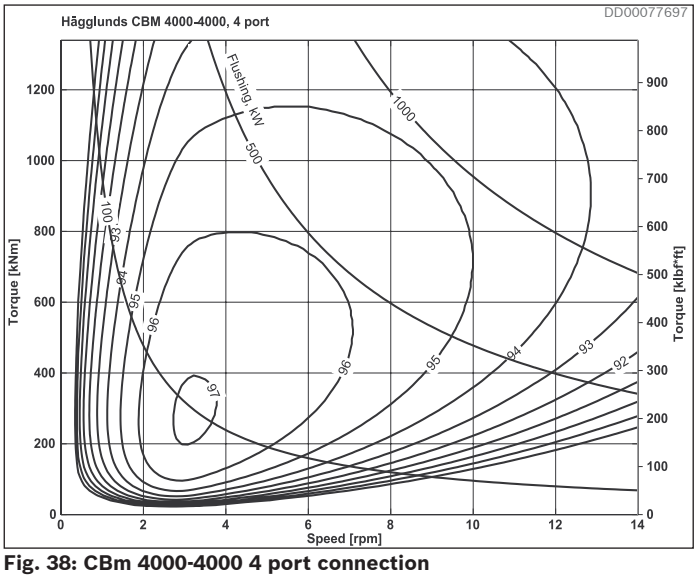

Fig. 38: CBm 4000-4000 4 port connection

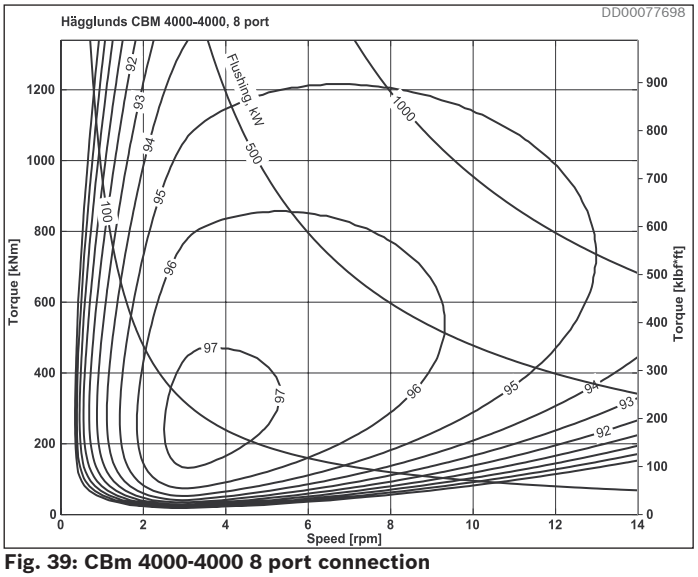

Fig. 39: CBm 4000-4000 8 port connection

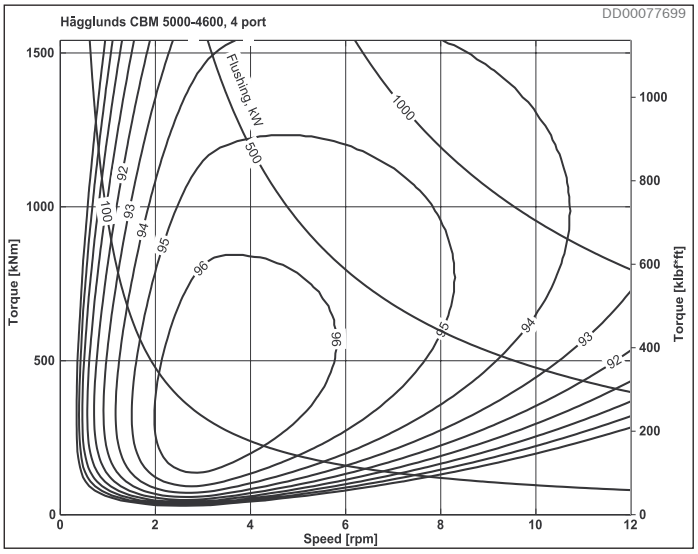

Fig. 40: CBm 5000-4600 4 port connection

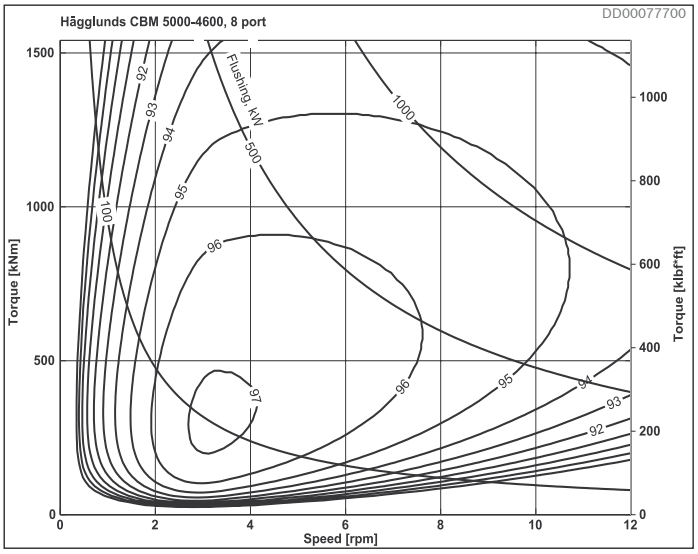

Fig. 41: CBm 5000-4600 8 port connection

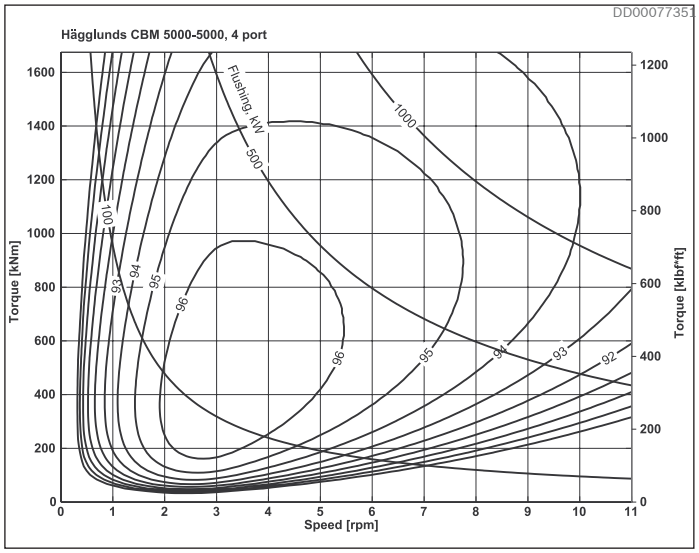

Fig. 42: CBm 5000-5000 4 port connection

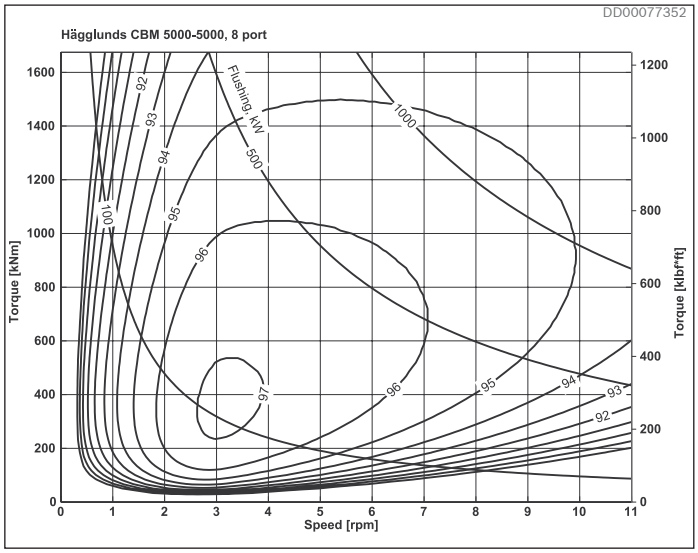

Fig. 43: CBm 5000-5000 8 port connection

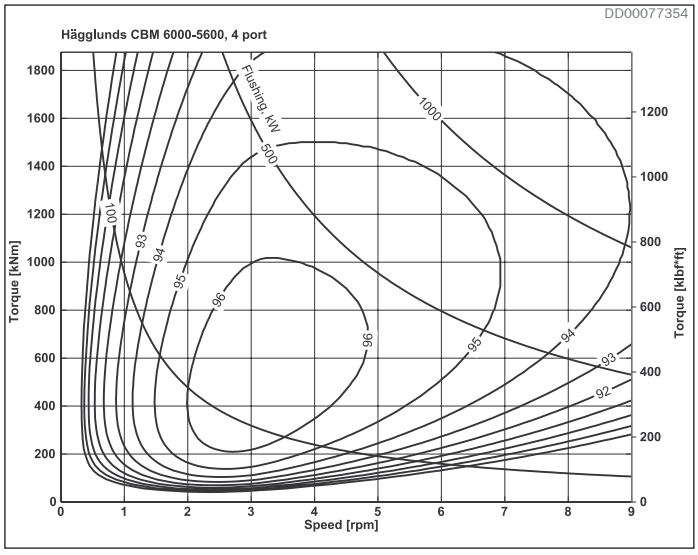

Fig. 44: CBm 6000-5600 4 port connection

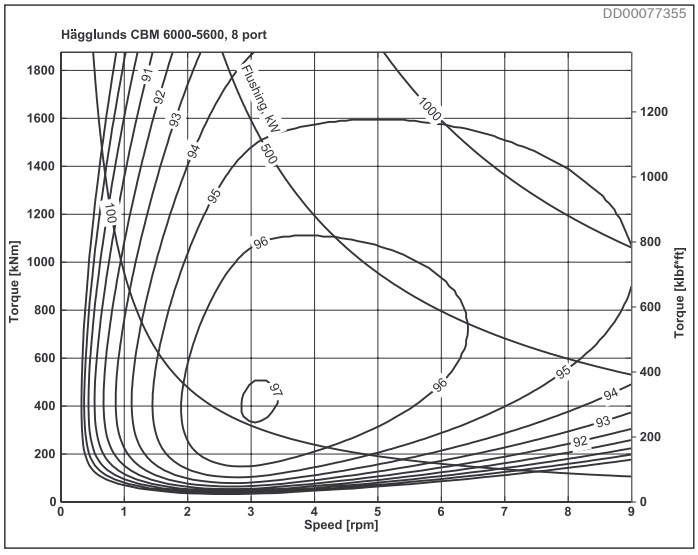

Fig. 45: CBm 6000-5600 8 port connection

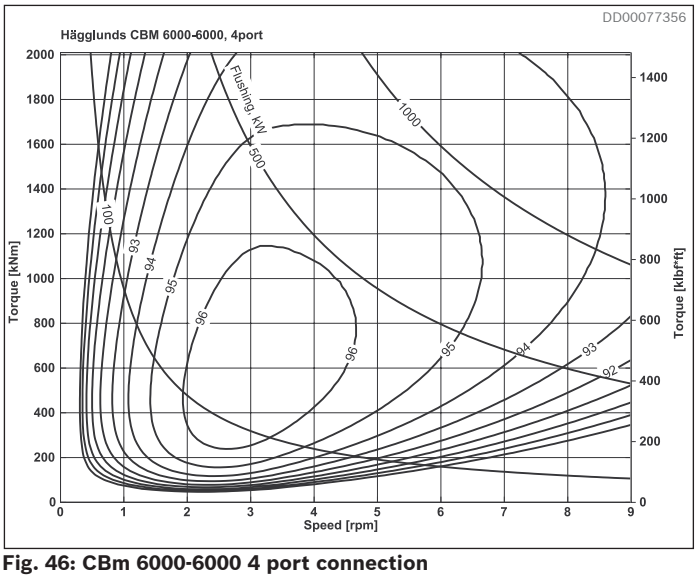

Fig. 46: CBm 6000-6000 4 port connection

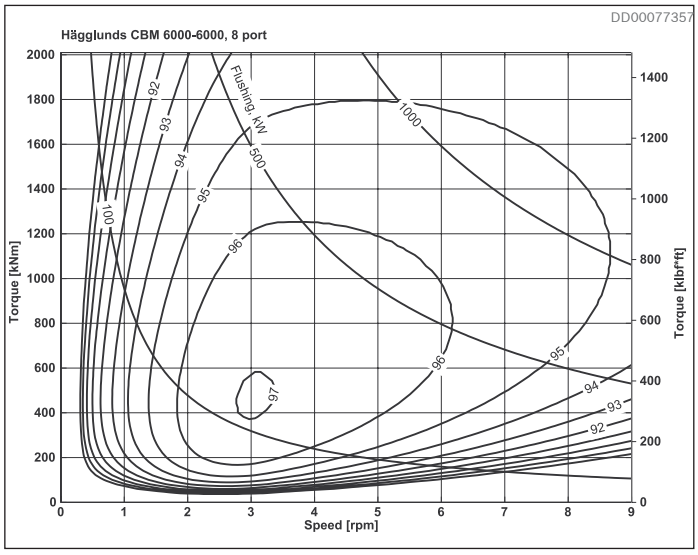

Fig. 47: CBm 6000-6000 8 port connection

4.7 Pressure loss diagrams

Pressure loss, oil viscosity 40 cSt

$$\text{Actual pressure difference} = \frac{\text{output torque}}{\text{specific torque} \cdot \text{mechanichal effiency}} + \text{pressure loss} \qquad \Delta p = \frac{T}{Ts \cdot \eta_m} + \Delta p_l$$

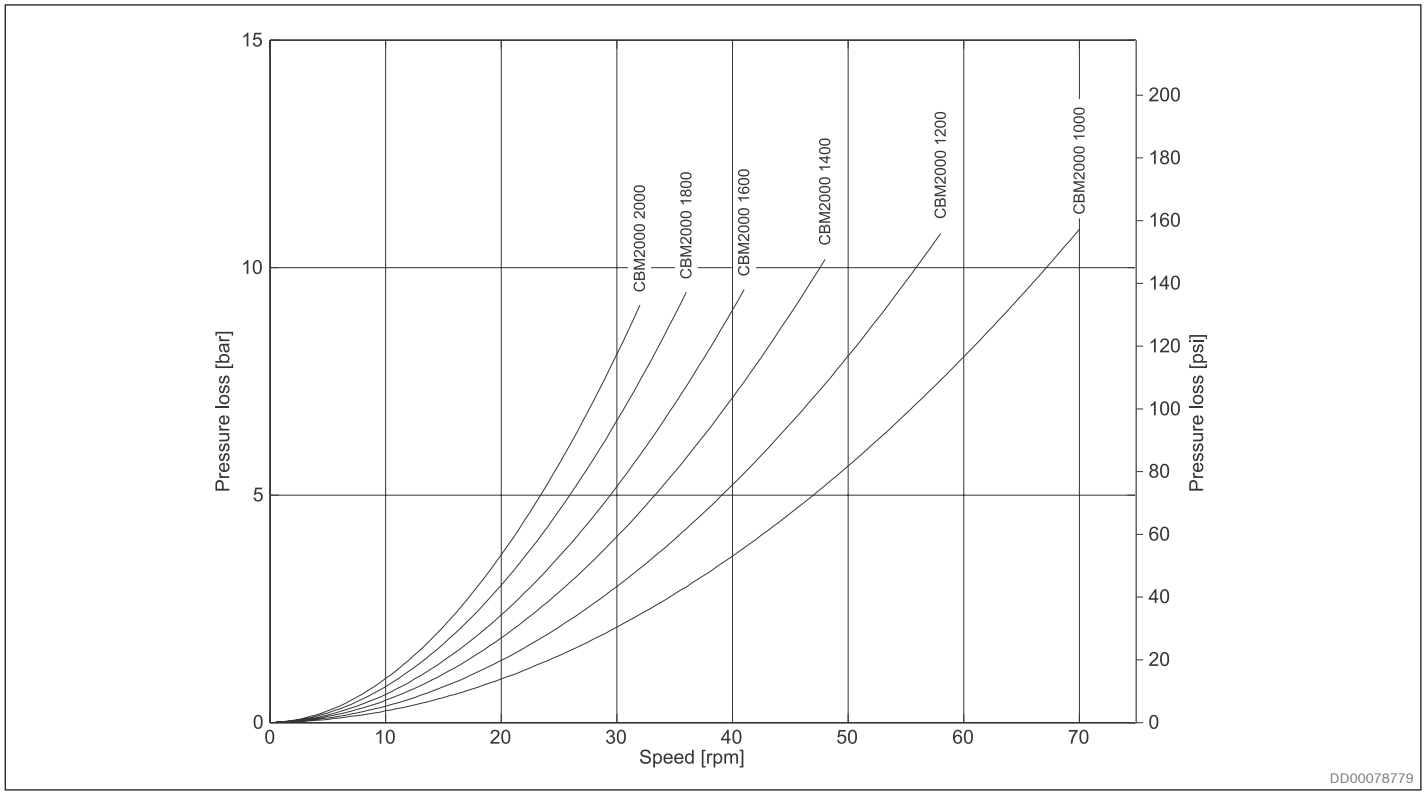

Fig. 48: CBm 2000 pressure loss 4 ports

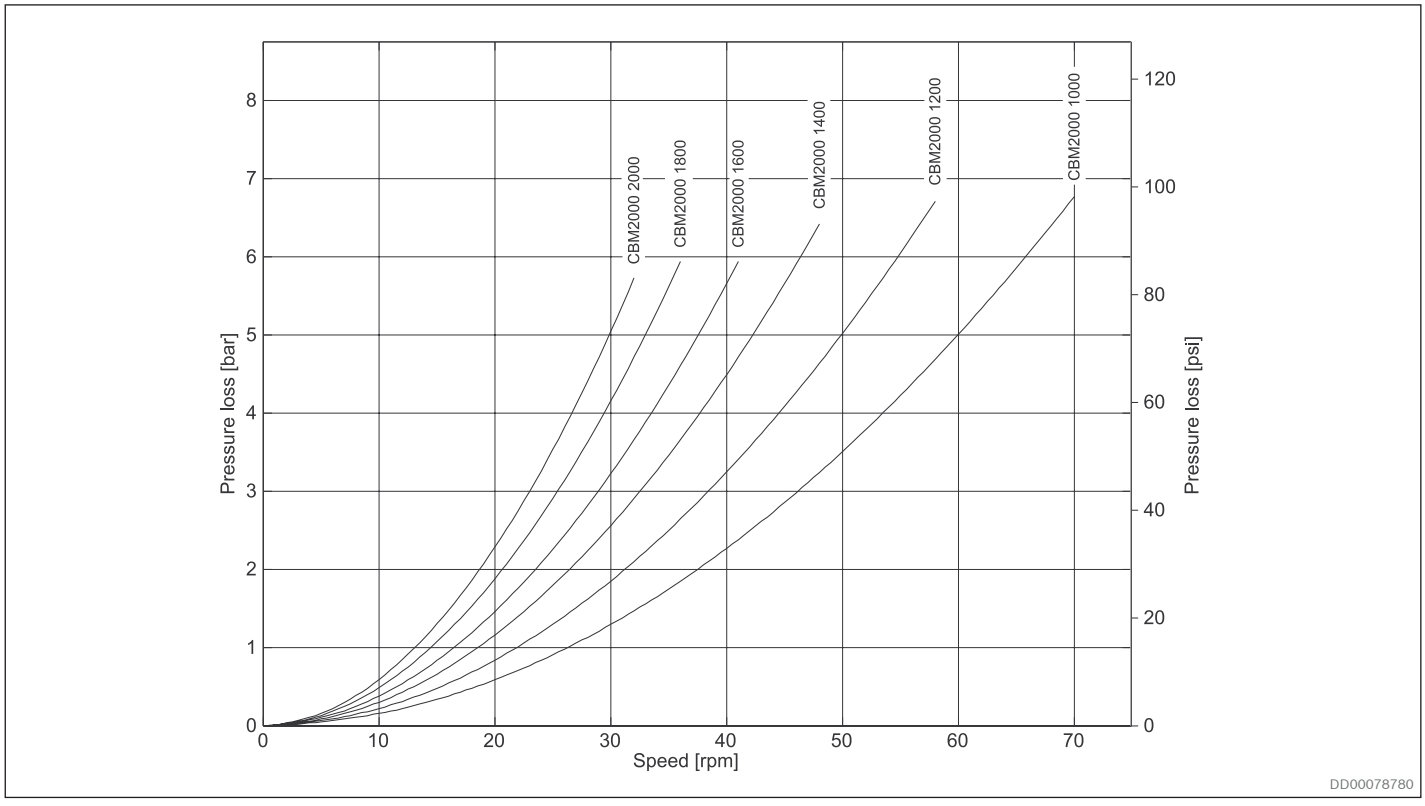

Fig. 49: CBm 2000 pressure loss 8 ports

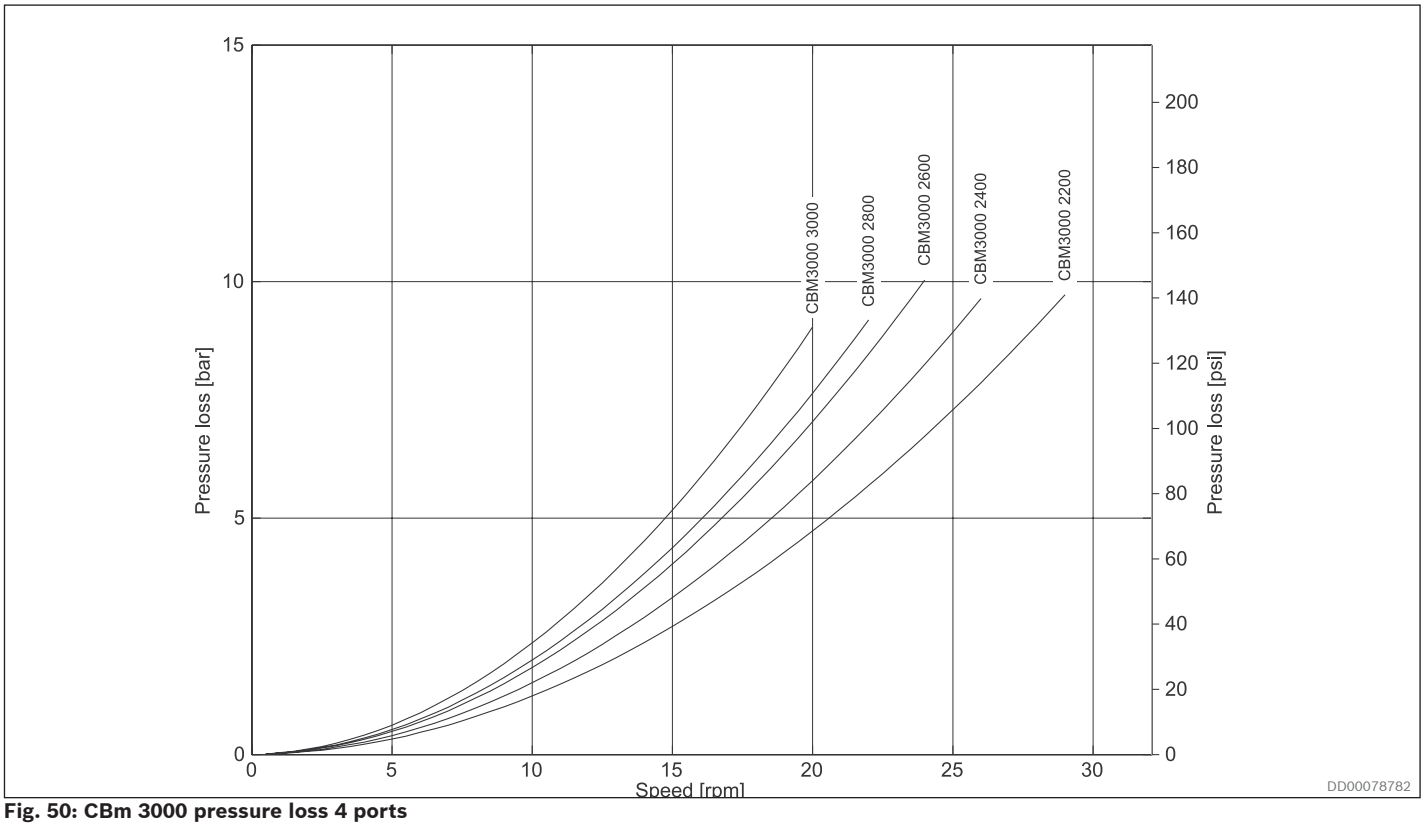

Fig. 50: CBm 3000 pressure loss 4 ports

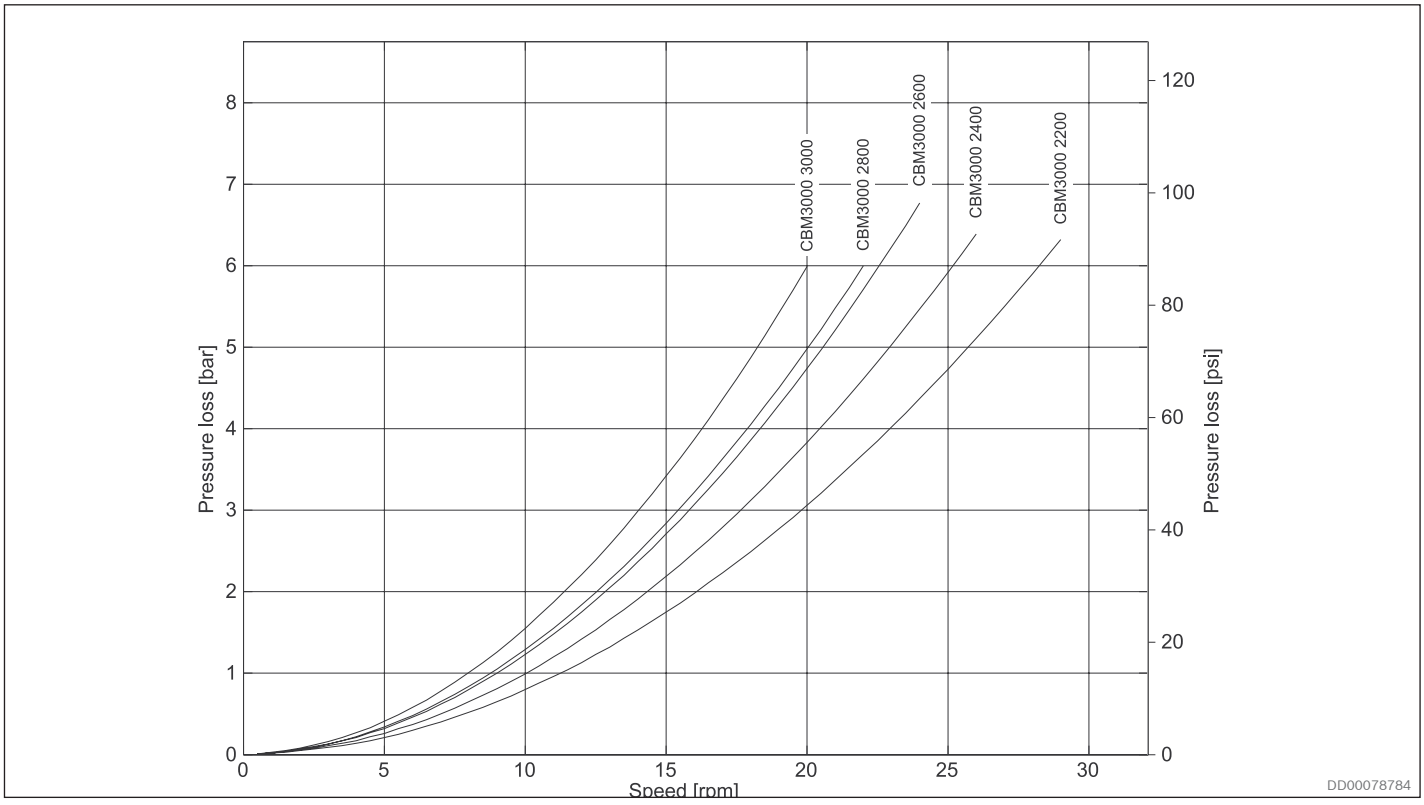

Fig. 51: CBm 3000 pressure loss 8 ports

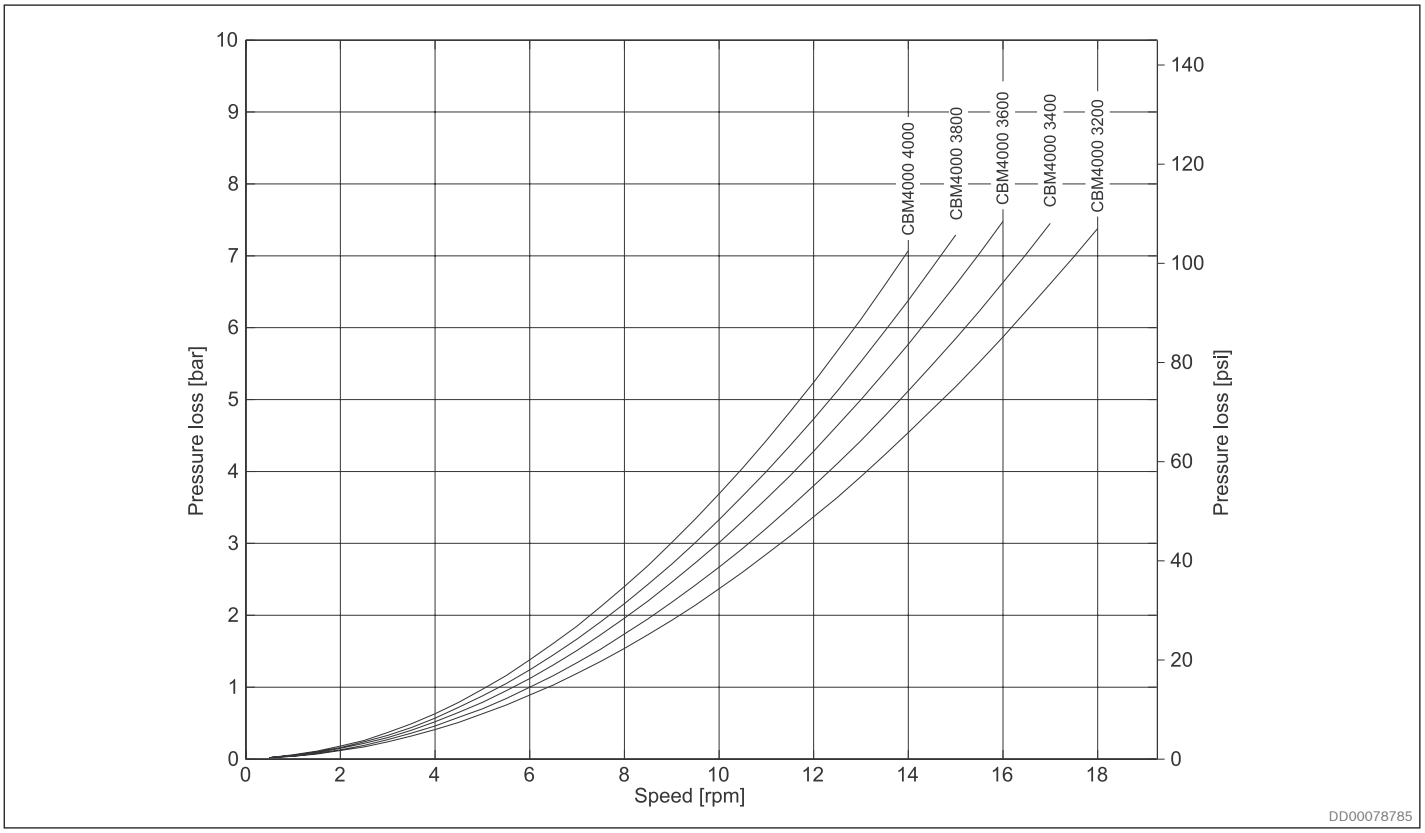

Fig. 52: CBm 4000 pressure loss 4 ports

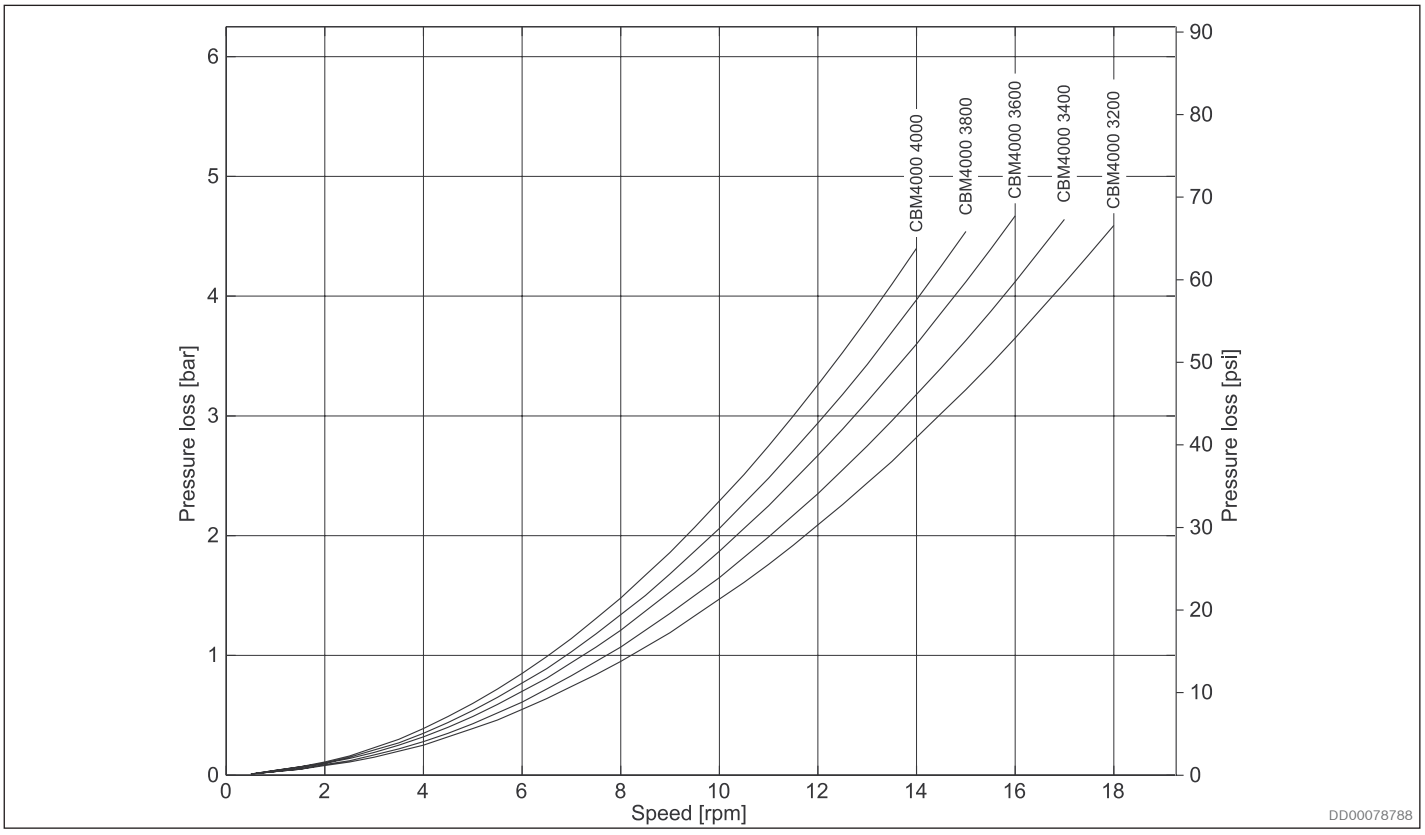

Fig. 53: CBm 4000 pressure loss 8 ports

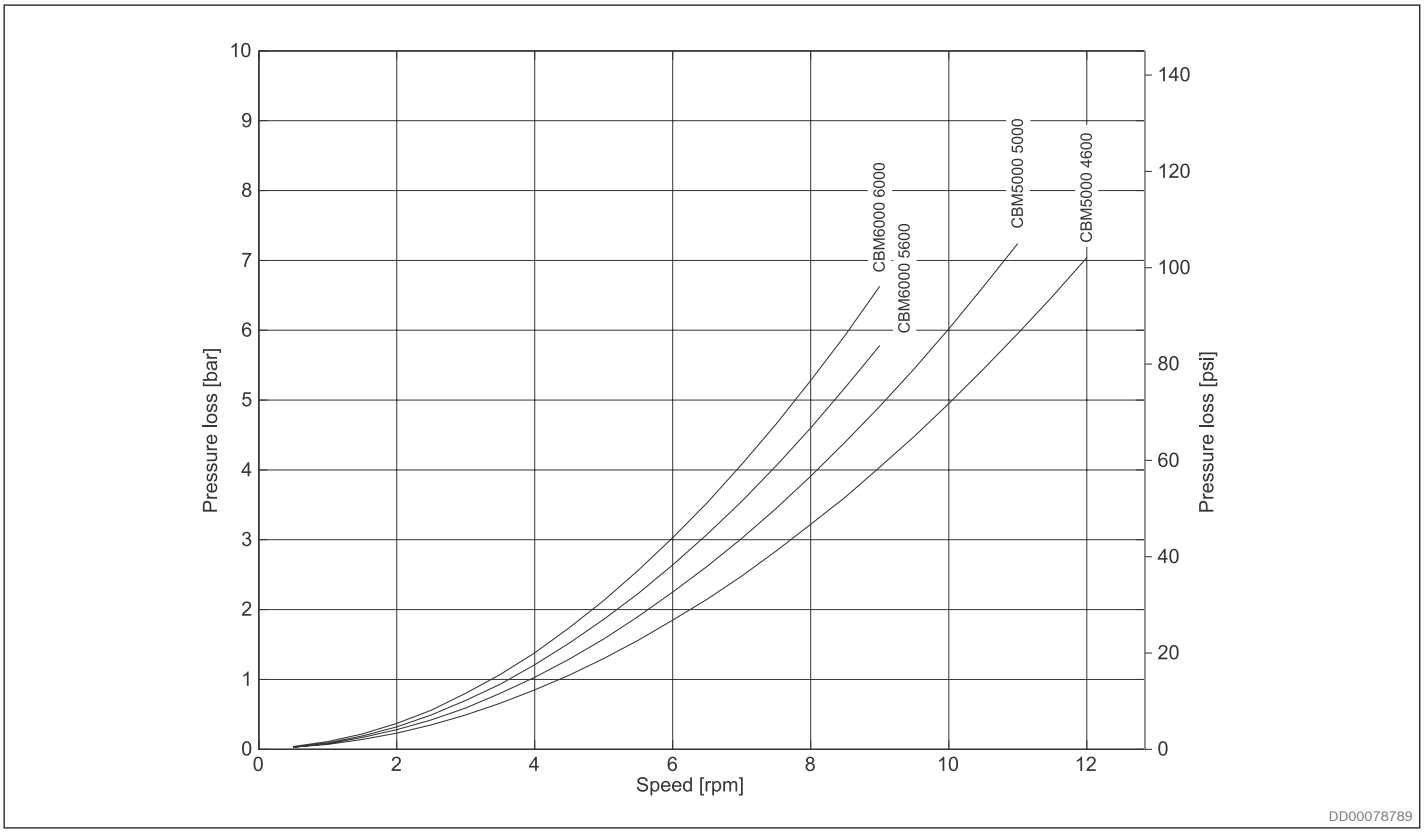

Fig. 54: CBm 5000, 6000 pressure loss 4 ports

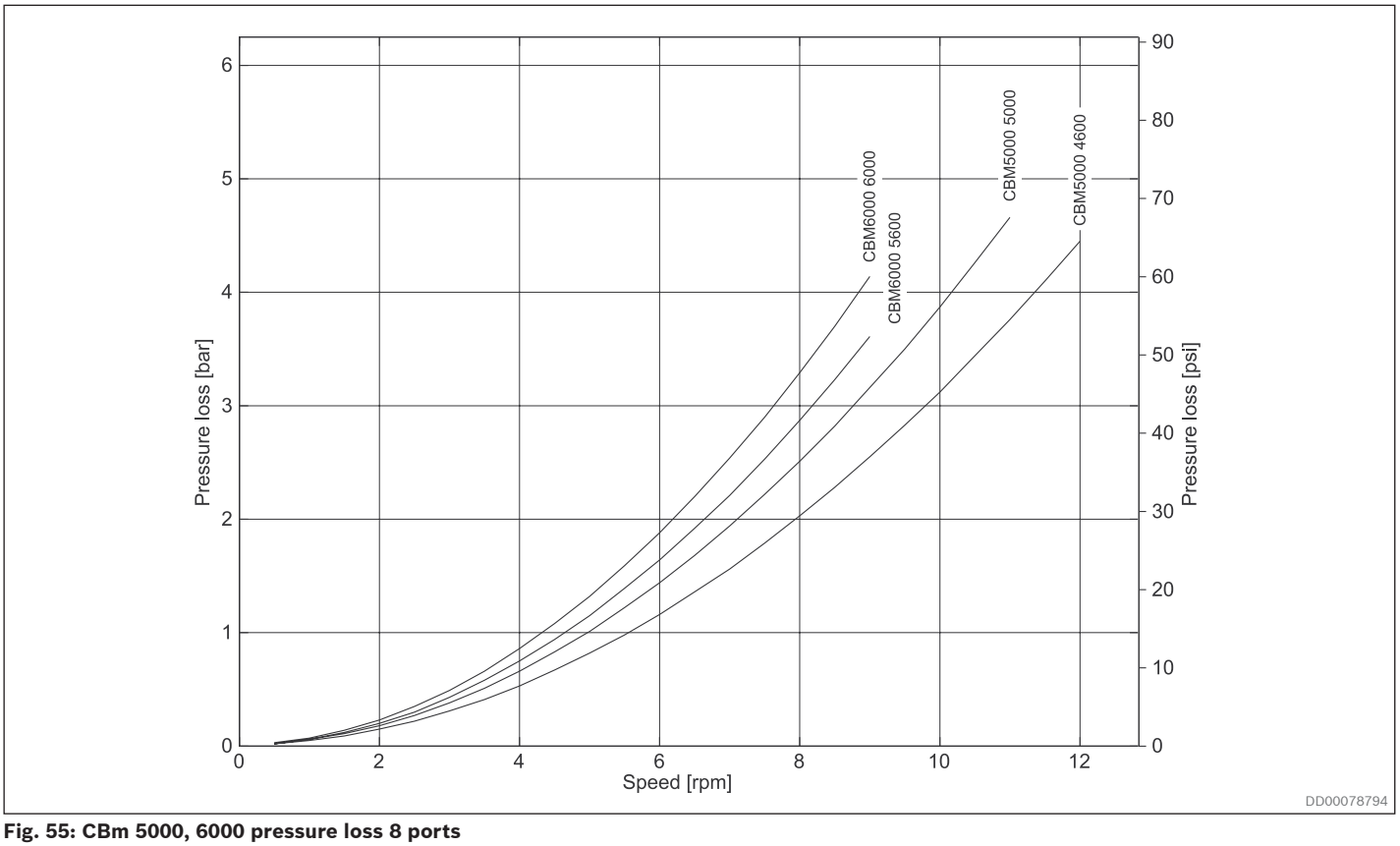

Fig. 55: CBm 5000, 6000 pressure loss 8 ports

4.8 Quick selection diagram

Rated life for Hägglunds CBm is calculated according to DIN ISO 281 Apendix 1.

The diagram below represents the torque and speed, corresponding to a modified rating life L10mh = 40 000 h. Oil viscosity in motor case 40 cSt. Contamination level not exceeding ISO 4406:1999 18/16/13 (NAS 1638, class 7). The diagram is based on a charge pressure of 15 bar (218 psi).

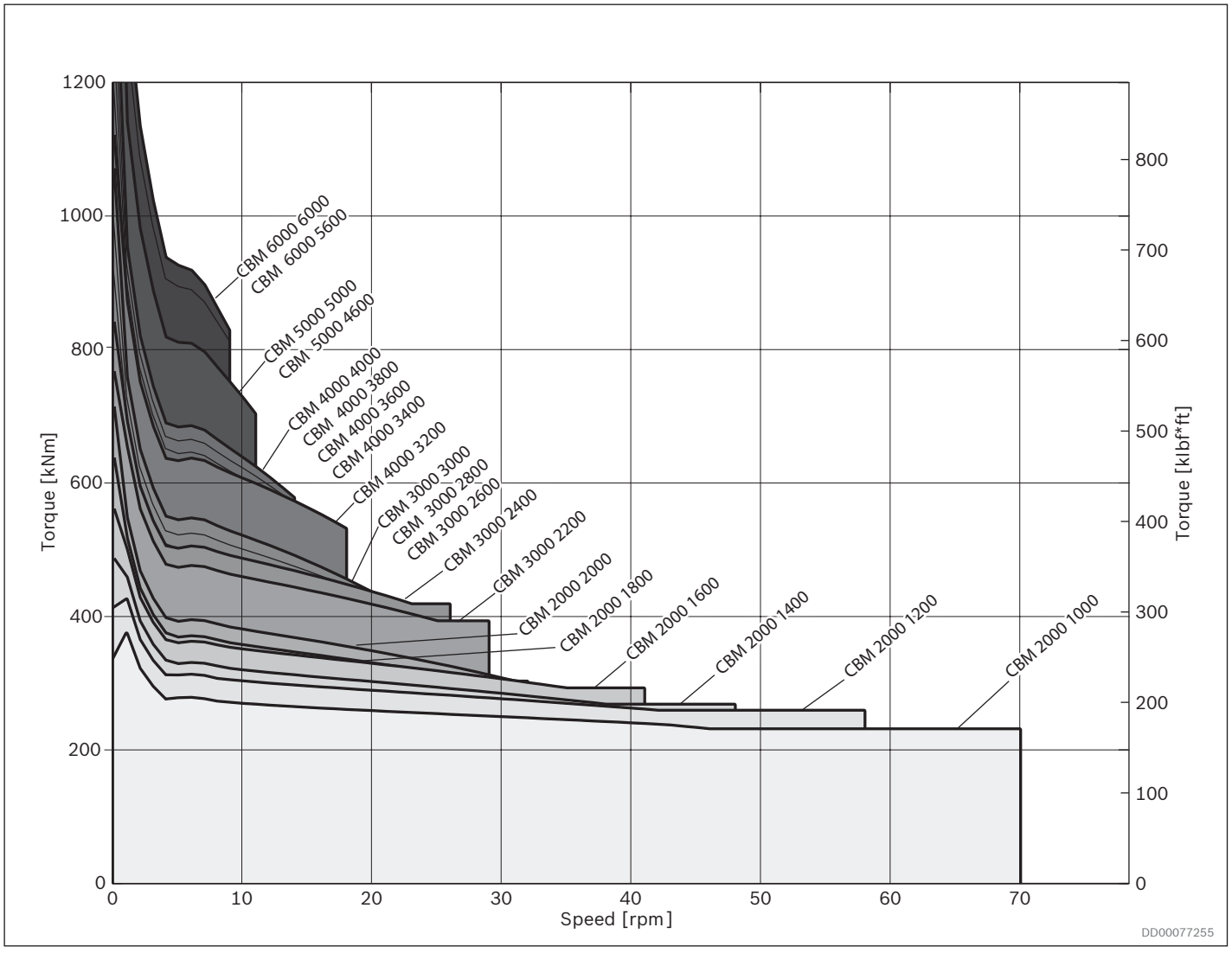

Fig. 56: Quick selection diagram

Notice!
Higher case oil viscosity increases the motor rating life considerably.
Reduced temperature in the motor case, increase rating life for the motor.

4.9 Draining, venting and flushing of the motor

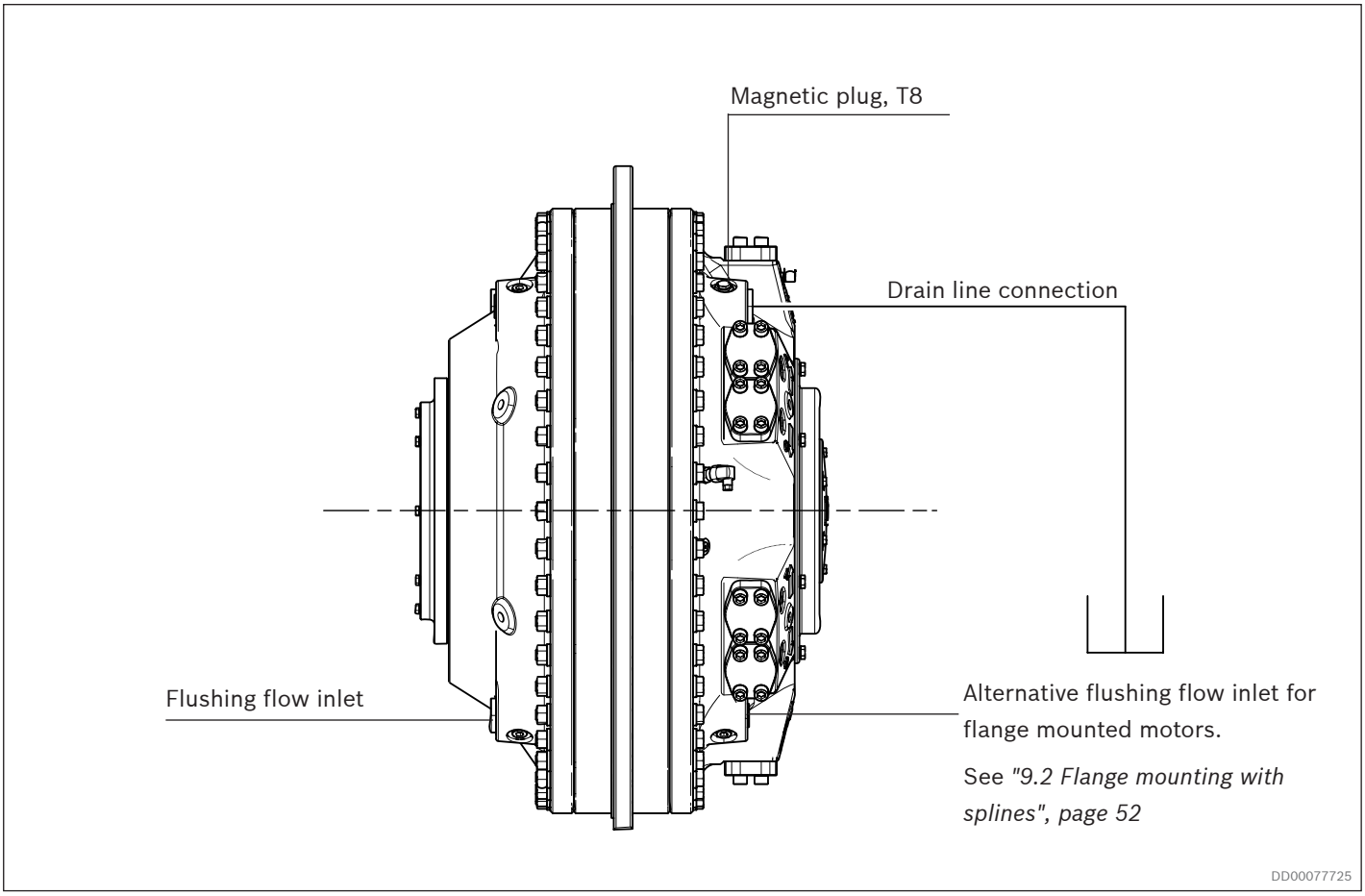

Fig. 57: Horizontal mounting

4.9.1 Horizontal mounting

When the motor is installed with the shaft in the horizontal plane, the highest of the four drain outlets D1, D2, D3 or D4 must always be used (see *Fig. 57: Horizontal mounting*). Drain line must be connected to the tank with a minimum of restrictions, to ensure that the maximum case pressure is not exceeded.
A magnetic plug is pre assembled from factory in connection T8, in the drain outlet D3.

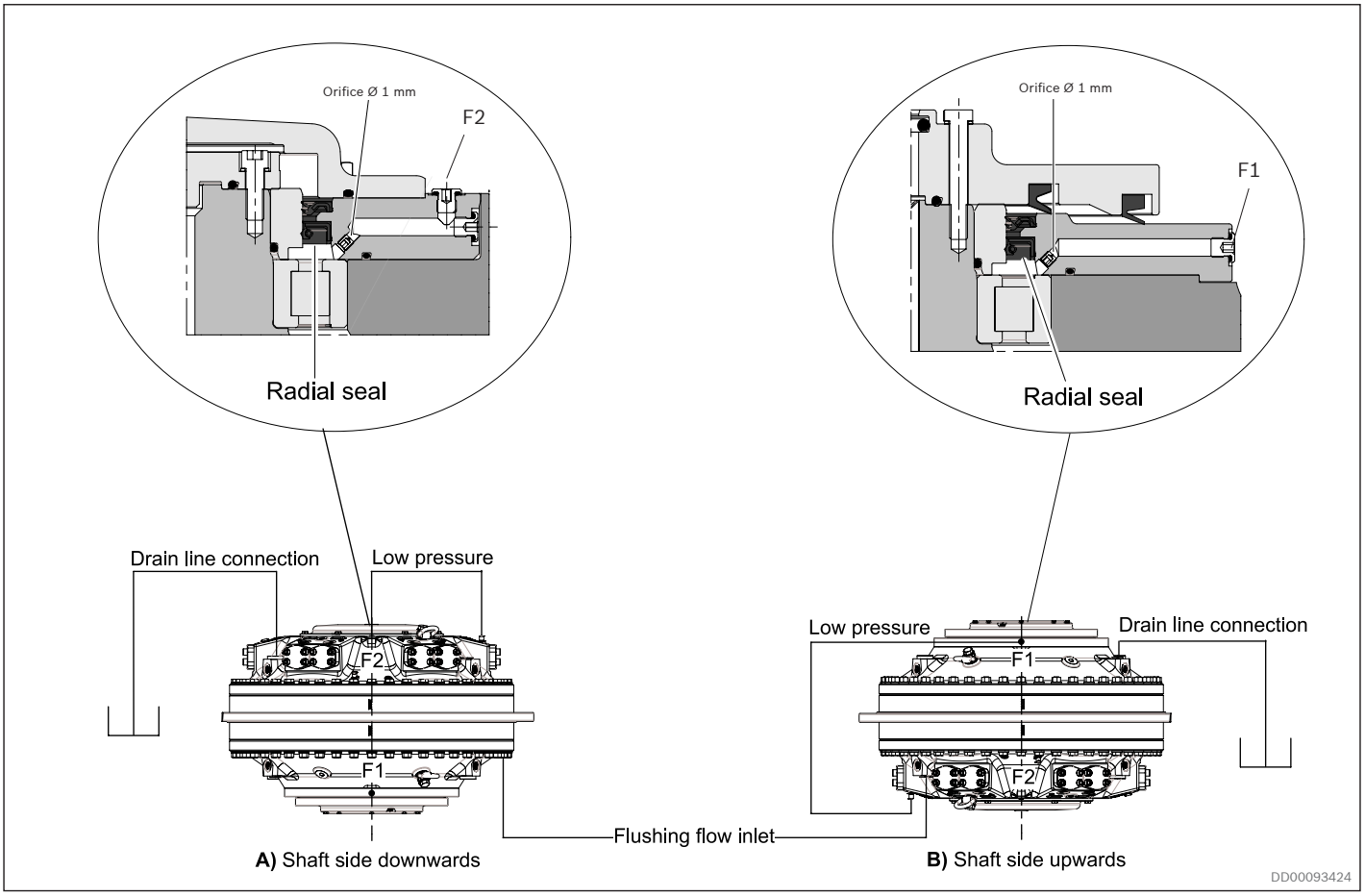

Fig. 58: Vertical mounting

4.9.2 Vertical mounting

When the motor is mounted vertically, one of the highest drain ports D1 to D8 must be used.
Flushing (lubrication) of radial seal from low pressure is necessary.

A) Motor shaft pointing downwards

The drain line must be connected to one of the drain ports D1 to D4 in the connection block. (See *Fig. 58: Vertical mounting* alt.*: A) Shaft side downwards*).
The flushing connection F2 shall be connected to low pressure. With bidirectional drives, use the connection with lowest average pressure. (Connecting to high pressure will increase the motor drain flow).

B) Motor shaft pointing upwards

The drain line must be connected to one of the drain portsD5 to D8 in the shaft end housing. (See *Fig. 58: Vertical mounting*, *alt.: B) Shaft side upwards*).The flushing connection F1 on the shaft end housing should be connected to the low pressure. With bidirectional drives, use the connection with lowest average pressure.
(Connecting to high pressure will increase the motor drain flow).

4.10 Flushing

Flushing of motor case

The CBm motors have very high overall efficiency, and they are frequently used in applications with high power.
To avoid high temperature in the case, the losses generated in the motors must be cooled away. High temperature gives lower viscosity and this gives reduction in basic rating life and max allowed power for the motor.
Flushing flow inlets, see *Fig. 57* and *Fig. 58*.
For continuous duty the motors must be flushed when power exceed the following max power:

Table 8: Maximum motor power without flushing

Frame size	Flushing limit power, E_{FL}	
	kW	hp
CBm 2000-6000	500	670

When the motor have to be flushed, the required flushing flow can be calculated according to following:
E_1 = Power loss due to mechanical losses = c • motor power
E_2 = Power loss due to volumetric losses

$$E_1 = \frac{c \cdot p_{high} \cdot n \cdot V_i}{600 \cdot 1000} \text{ (kW)}$$

$$E_2 = \frac{q_1 \cdot p_{high}}{600} \text{ (kW)}$$

$$E_{1US} \quad \frac{c \cdot p_{high} \cdot n \cdot V_i}{1714 \cdot 231} \text{ (hp)}$$

$$E_{2US} \quad \frac{q_1 \cdot p_{high}}{1714} \text{ (hp)}$$

p_{high} = motor high pressure [bar] [psi]
n = motor speed [rpm]
V_i = motor displacement [cm³/rev] [in³/rev]
q_l = motor leakage [l/min] [gpm]

Heat transmitted to air at ambient temperature +20°C (68°F) and motor case temperature +50°C (122°F).

Hägglunds CBm 2000–6000 2,5 kW (3,35 hp)
c = 0,01 for Hägglunds CBm. Total power loss ET = E1 + E2

Required flushing to keep motor case maximum 10°C (18°F) warmer than flushing oil:
q flushing = 3.4 · (E_1 + E_2 - Heat transmitted to air) l/min.
q flushing $_{US}$ = 0.67 · (E_{1US} + E_{2US} - Heat transmitted to air) gpm.
Viscosity in the motor case must be controlled according to diagram, *Fig. 7*.

Exemple:
Hägglunds CBm 2000 working at 200 bar and n = 20 rpm.

Total power = $\frac{p_{high} \cdot n \cdot V_i}{600 \cdot 1000} = \frac{200 \cdot 20 \cdot 126\,726}{600 \cdot 1000}$ = 845 kW. The motor case must be flushed

$E_1 = 0.01 \cdot 845 = 8.45$ kW

$E_2 = \frac{8 \cdot 200}{600} = 2.7$ kW

q flushing = 3.4 · (E_1 + E_2 - Heat transmitted to air) = 3.4 · (8.45 + 2.7 - 2.5) = 29 l/min
q flushing $_{US}$ = 0.67 · (E_{1US} + E_{2US} - Heat transmitted to air) = 0.67 · (11.33 + 3.62 - 3.35) = 7.8 gpm

4.11 External leakage

External leakage is from the distributor to the motor case and from the piston assembly to the motor case.
Valid for 40 cSt.

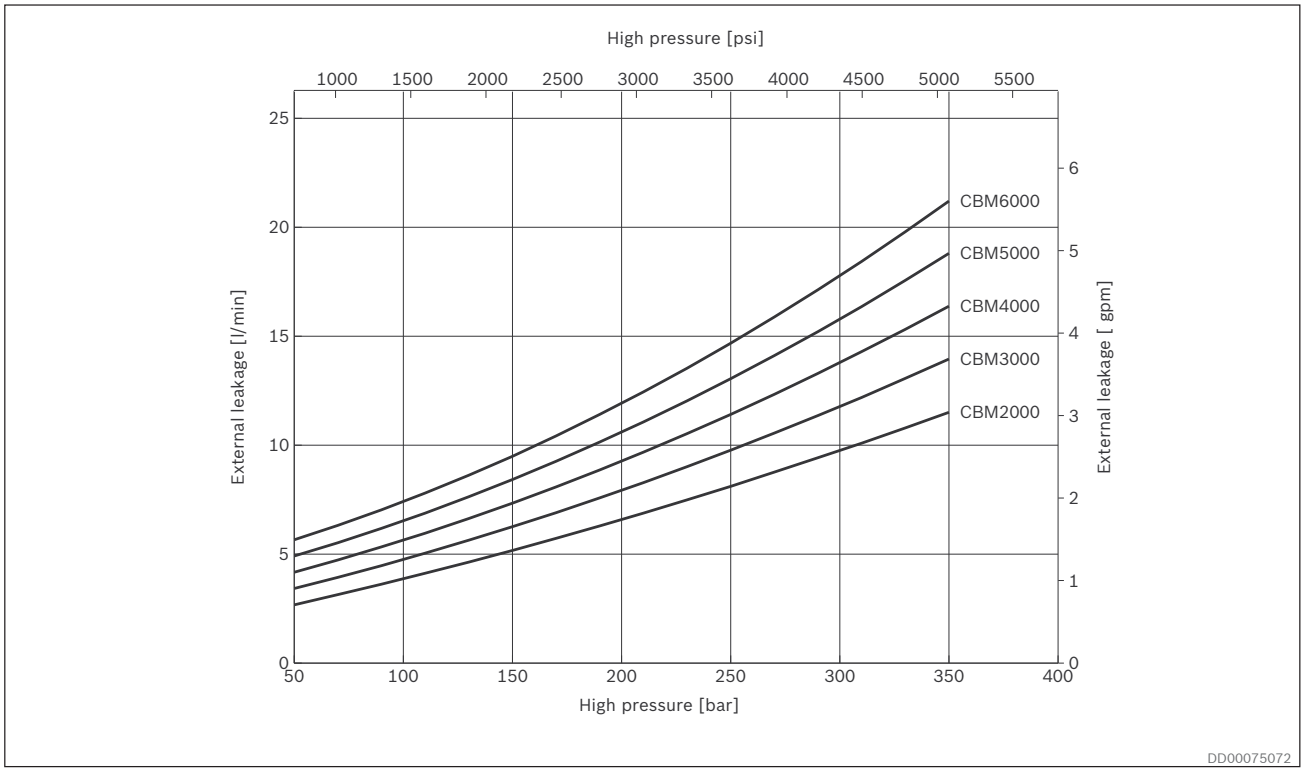

Fig. 59: External leakage

The diagram shows the avarage values.
Actual flow rate = speed · displacement + external leakage

$$q = \frac{n \cdot V_i}{1000} + q_i \cdot K \quad [l/min]$$

4.12 Viscosity factor K

Variation in external leakage at different oil viscosities. When calculating external leakage using other viscosities than 40 cSt, multiply the value given in the external leakage diagram by the factor K.

$$q_{US} = \frac{n \cdot V_i}{231} + q_i \cdot K \quad [gpm]$$

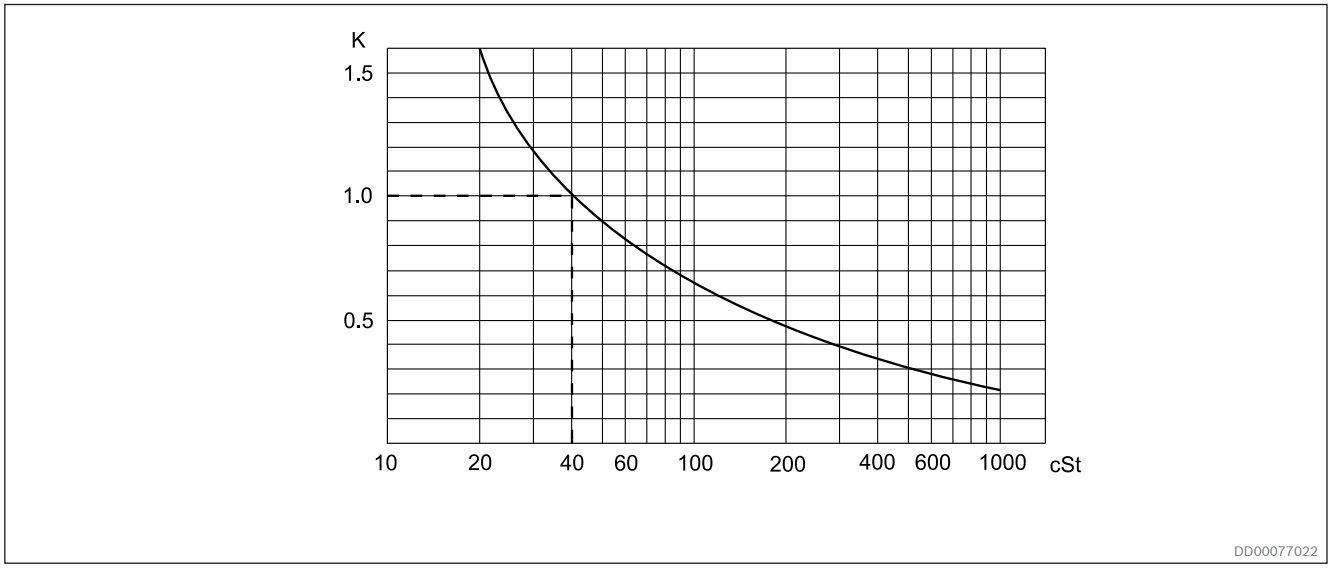

Fig. 60: Viscosity factor K

4.13 Freewheeling

4.13.1 The function of freewheeling

Hägglunds CBm motors can be operated in freewheeling. Principally this is performed by disengaging the pistons, allowing the rotating group to rotate as a flywheel on its main bearings. The piston units are not engaged and thus there is no oil flow to cause a flow loss, Hägglunds motors of standard design are suitable for this performance due to the following facts:

1. Pistons are not actuated by any return springs.
2. The motor case can withstand sufficient case pressure to force the pistons toward the bottom of each cylinder bore and keep them in this position.

The basic function of the freewheeling is to have the drain ports D1-D8 lightly pressurized while main ports A and C are without restriction drained directly to the fluid reservoir. See *Fig. 62* The case pressure introduced in the normal drain connection will then act on the outer surface of each piston assembly pressing them towards the motor centre.

The rotating part of the motor (cylinder block with piston and cam roller) can now rotate on its main bearings without any pumping of oil, as the piston with cam rollers have lost any contact with the cam ring. See *Fig. 61*.

During freewheeling periods, the following functions must be performed:

1. Main connections A & C of the motor drained to reservoir.
2. Fail-safe type brake released, if used.
3. An adeuate pressure introduced into the drain ports of the motor. See *Fig. 63*

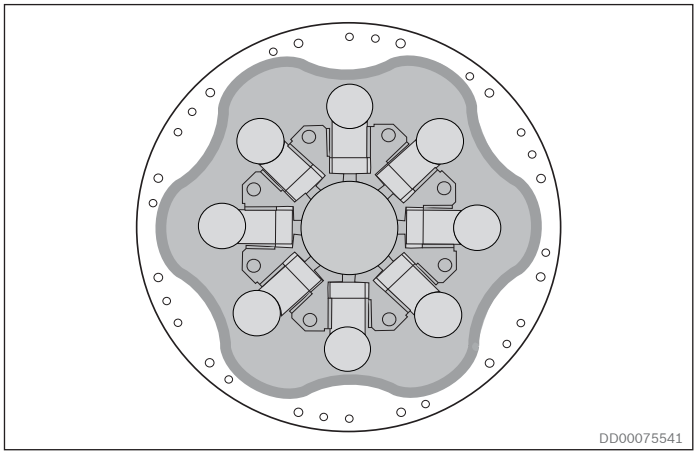

Fig. 61: Freewheeling

4.13.2 Circuit design

The following schematic explains a system (closed/open) with freewheeling (activated mode illustrated) as a permanent feature for the application.

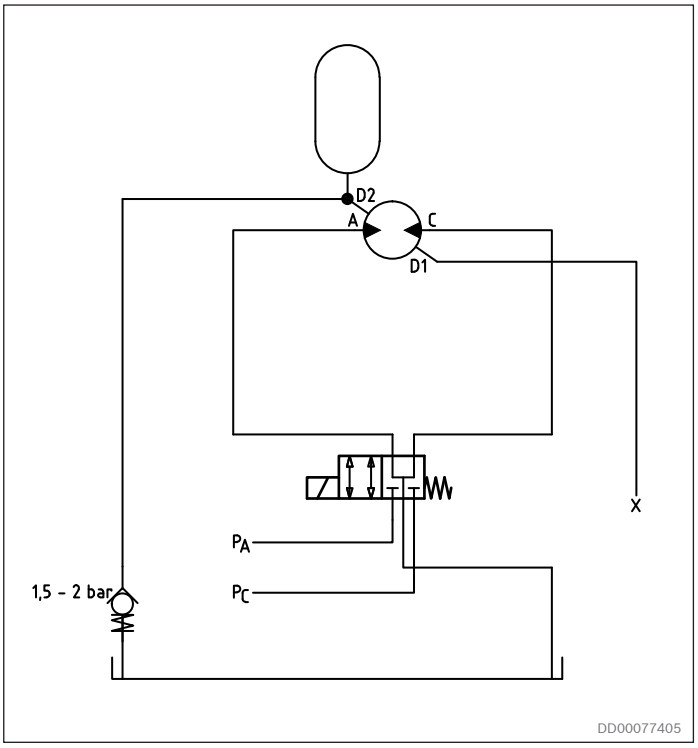

Fig. 62: Schematic principle freewheeling.

Freewheeling valve function, see *section 10.6.6 page 69.*

Notice!
It is not allowed for the pistons to extend back to the camring, until the motor has reached a complete standstill.

4.13.3 Oil volume for freewheeling

Freewheeling conditions are obtained by pressurizing the case via the drain connections and drain the main ports to tank. To retract all pistons completely, a certain oil volume is required depending upon motor type. This oil volume can be calculated from the following:

$$V_F = \frac{V_i}{2\ N_L}$$

V_F = Needed Freewheeling volume [cm^3] or(in^3)
V_i = Total displacement of the motor [cm^3] or(in^3)
N_L = 18 (No of lobes for one camring)

To use Hägglunds CBm motor in freewheeling mode must following be maintained:

- The motor must be pressurized all the time when the motor is in freewheeling mode, see *Fig. 63*.
- The motor must be flushed all the time when the motor is in frewheeling mode, see *Fig. 63*.

An accumulator can be added into the circuit to shorten the time to retract all the pistons completely, see *Fig. 63*.

An accumulator can be added into the circuit to reduce the pressure spikes in the motor case when the pistons are extracted, see *Fig. 62*.

4.13.4 Power loss freewheeling

Even if the freewheeling operation takes place with lowest possible friction in the main bearings and with no flow losses in the main ports of the motor, a powerloss must take place in the motor case due to viscous friction between moving and fixed parts. This powerloss is expressed in diagram, *Fig. 63*.

Case flushing is required to prevent overheating, see diagram *Fig. 63*

Required case pressure 1,5 -2 bar (22-29 psi).

Case oil temperatur to be below 50°C (122°F).

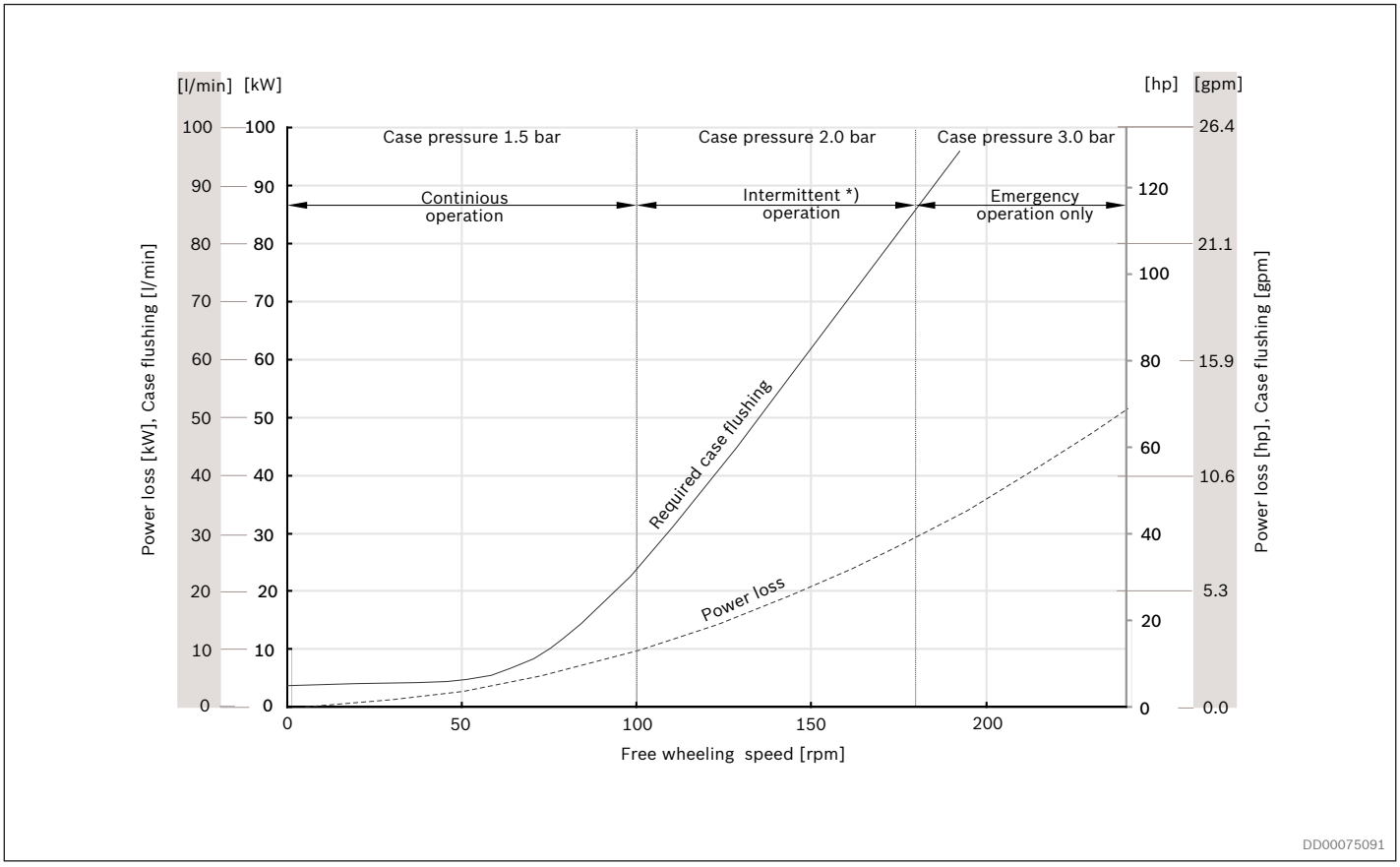

Fig. 63: Power loss freewheeling, oil viscosity 40 cSt (187 SSU)

*) Viton seals are recomended for speeds above 100 rpm.

Notice!

Freewheeling will require exchange of oil in the housing to prevent overheating.

In order to accomplish proper freewheeling, a case pressure of 1.5 (22 psi) has to be maintained.
On the other hand, a higher casing pressure than 2 bar (29 psi) should be avoided in order to achieve good life of the main radial shaft seal.

4.14 Permissible external loads

4.14.1 External load with torque arm mounting

Shaft mounted motor with torque arm.

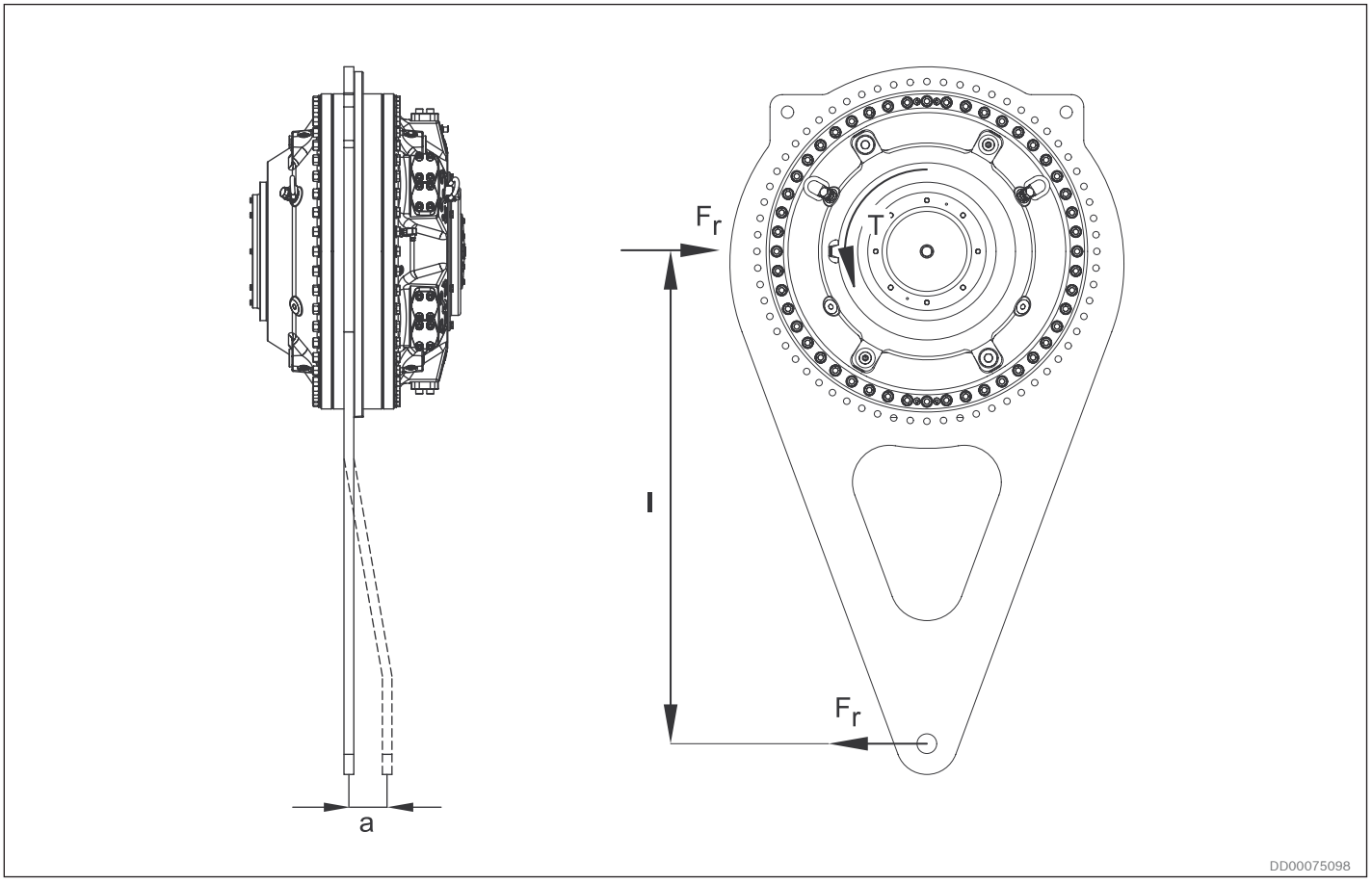

If non standard torque arms TCA are used, forces must be checked for main bearings and coupling.

$$F_r = \frac{T}{l}$$

F_r = Total radial force on fixed motor mounting

T = Output torque for motor

l = Lever length

a = The axial distance for action point of radial force

4.14.2 Permissible external dynamic loads

Permissible external dynamic loads Hägglunds CBm 2000 S, C and E, CBm 3000 C

Torque arm mounted motor. Viscosity 40 cSt/187 SSU, speed 10 rpm.

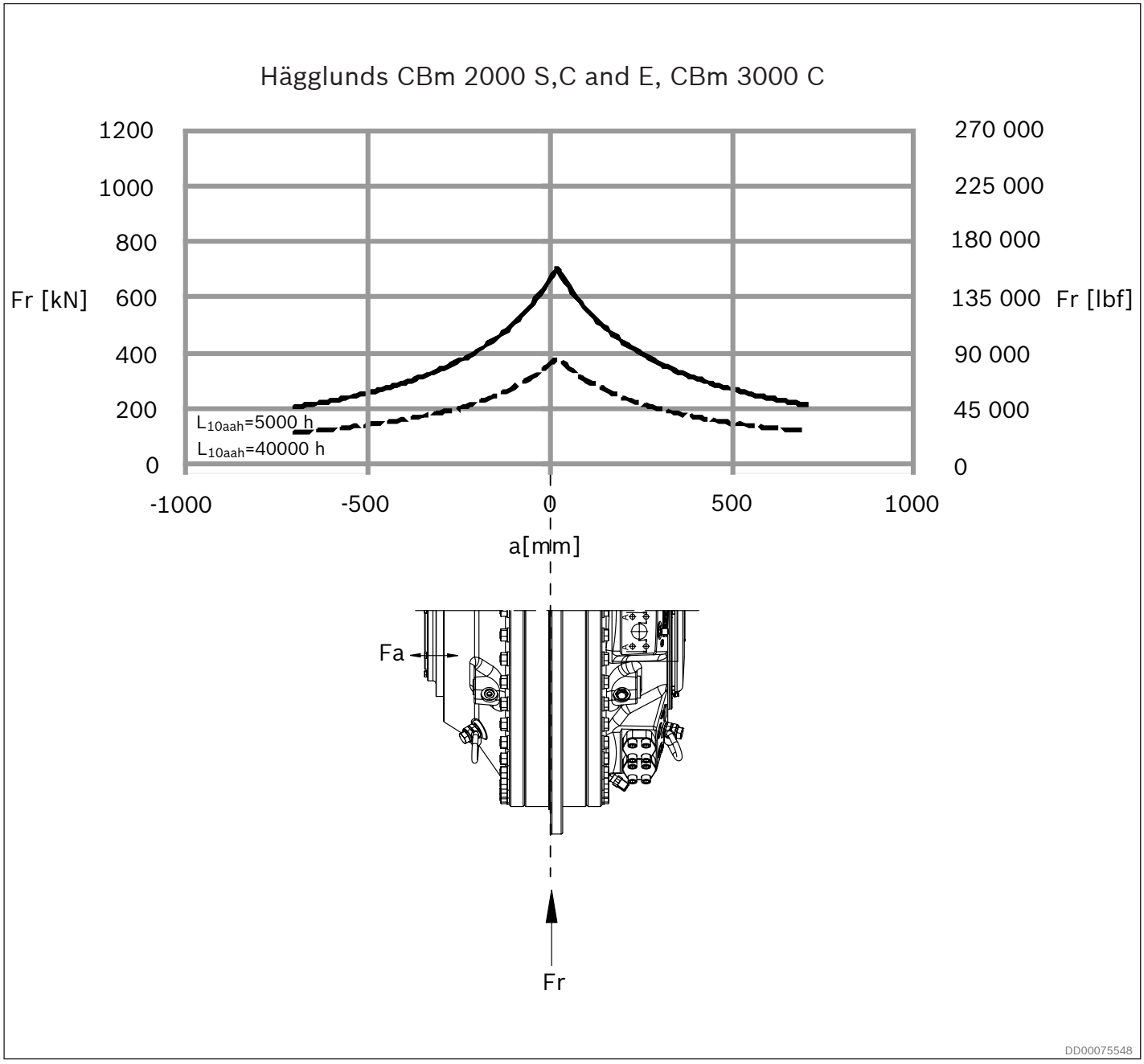

Notice!
When flange mounted motor, please contact Bosch Rexroths representative.

Axial loads: Permissible axial load for intermittent duty F_a = 150 000 N (32 000 lbf).

Remark: For continuous axial load applications, please contact your Bosch Rexroth representative.

Permissible external dynamic loads Hägglunds CBm 3000 S

Torque arm mounted motor. Viscosity 40 cSt/187 SSU, speed 6 rpm

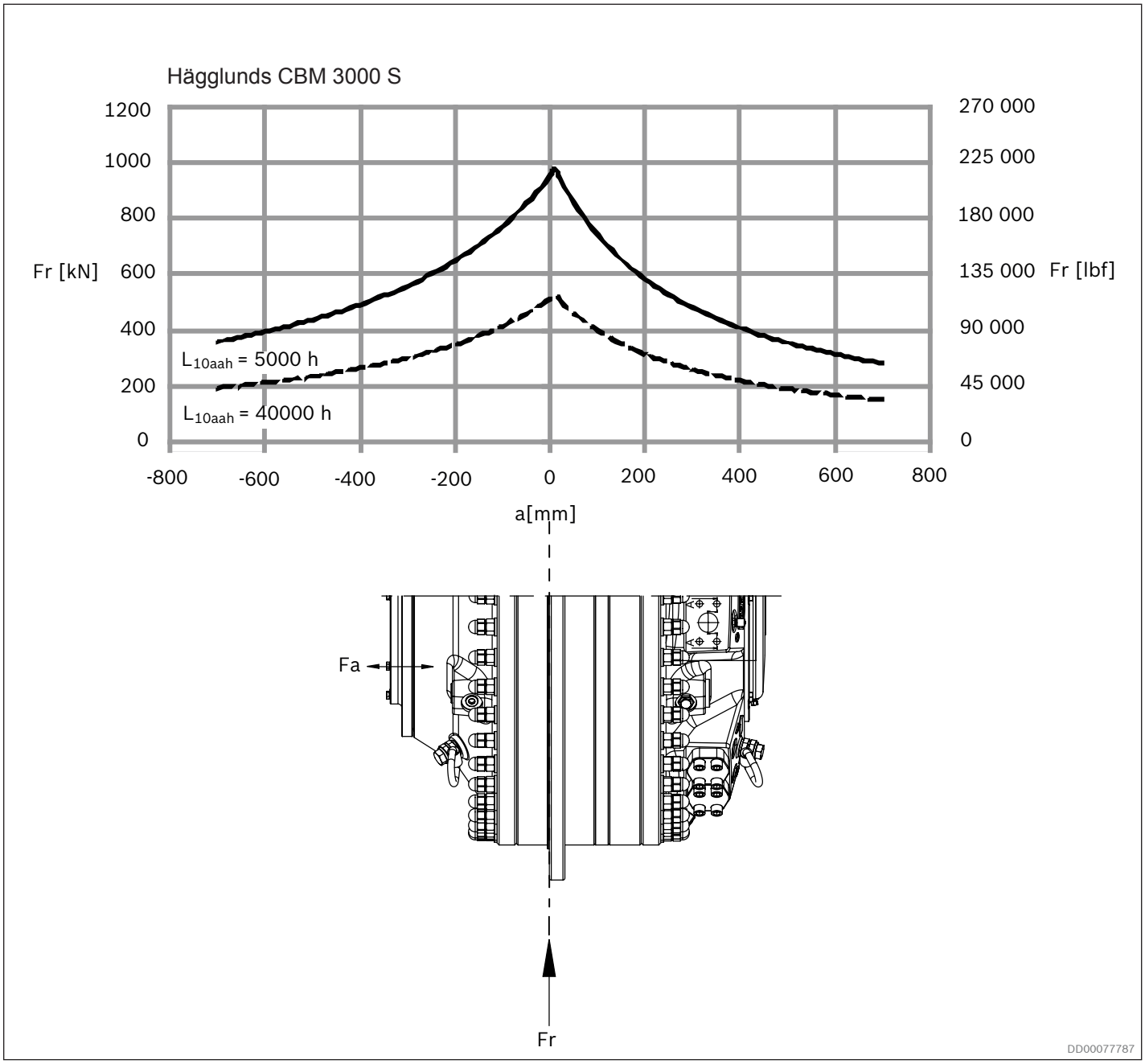

Notice!
When flange mounted motor, please contact Bosch Rexroths representative.

Axial loads: Permissible axial load for intermittent duty F_a = 150 000 N (32 000 lbf).

Remark: For continuous axial load applications, please contact your Bosch Rexroth representative.

Permissible external dynamic loads CBm 4000 S

Torque arm mounted motor.. Viscosity 40 cSt/187 SSU, speed 4 rpm.

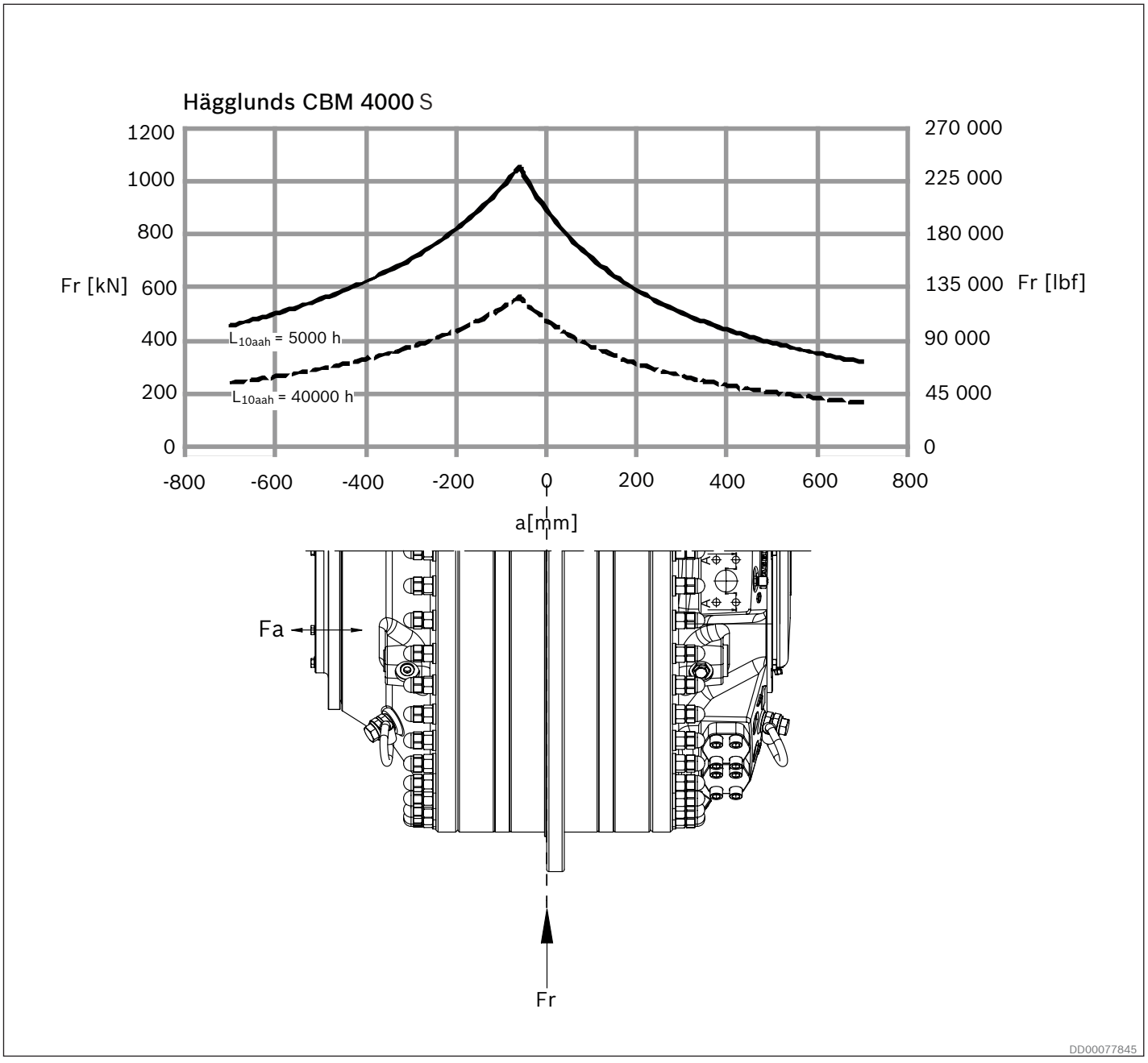

Notice!
When flange mounted motor, please contact Bosch Rexroths representative.

Axial loads: Permissible axial load for intermittent duty F_a = 150 000 N (32 000 lbf).

Remark: For continuous axial load applications, please contact your Bosch Rexroth representative.

Permissible external dynamic loads CBm 5000 S

Torque arm mounted motor. Viscosity 40 cSt/187 SSU, speed 3 rpm.

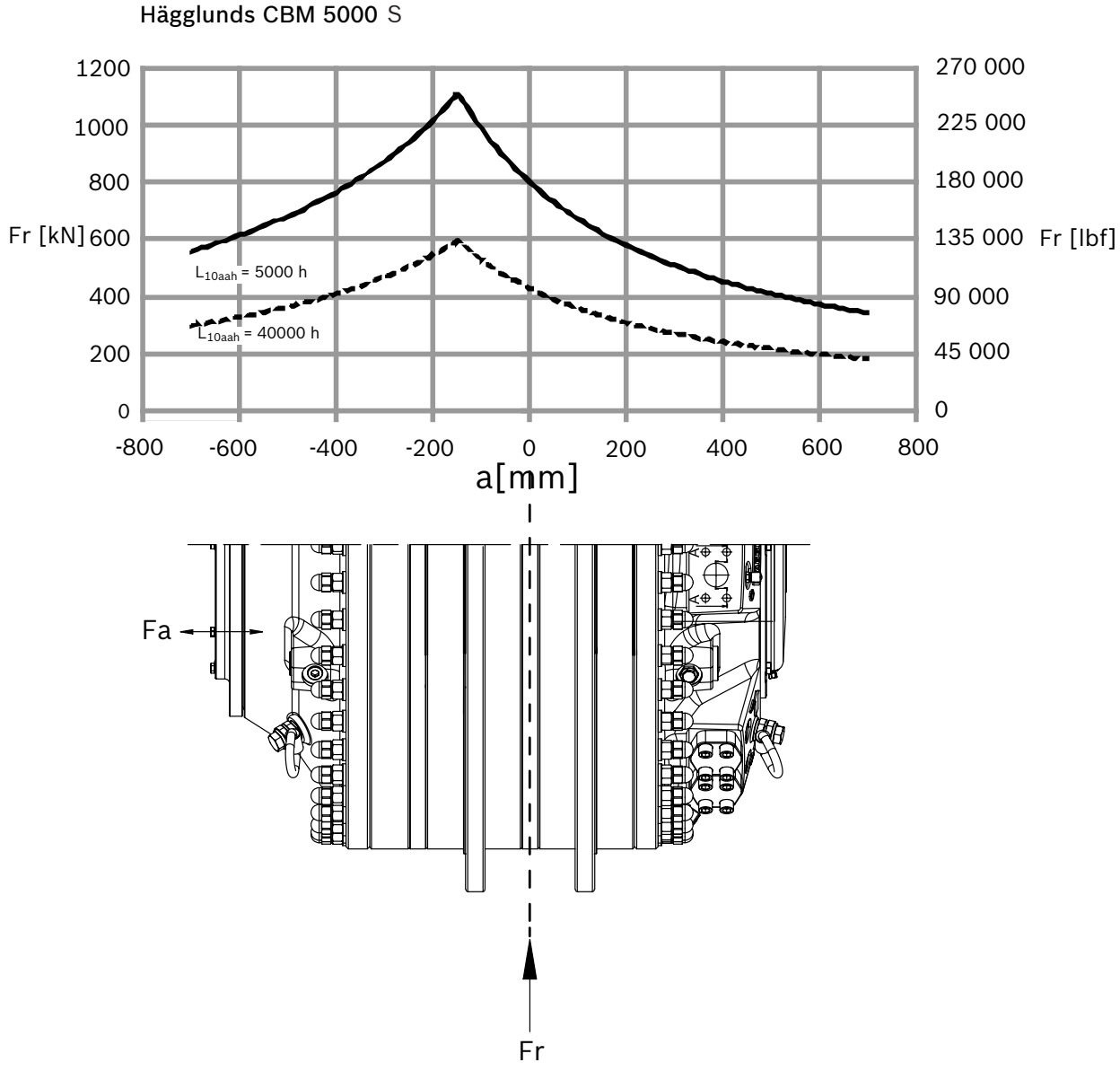

Notice!
When flange mounted motor, please contact Bosch Rexroths representative.

Axial loads: Permissible axial load for intermittent duty F_a = 150 000 N (32 000 lbf).

Remark: For continuous axial load applications, please contact your Bosch Rexroth representative.

Permissible external dynamic loads CBm 6000 S

Torque arm mounted motor. Viscosity 40 cSt/187 SSU, speed 2,5 rpm.

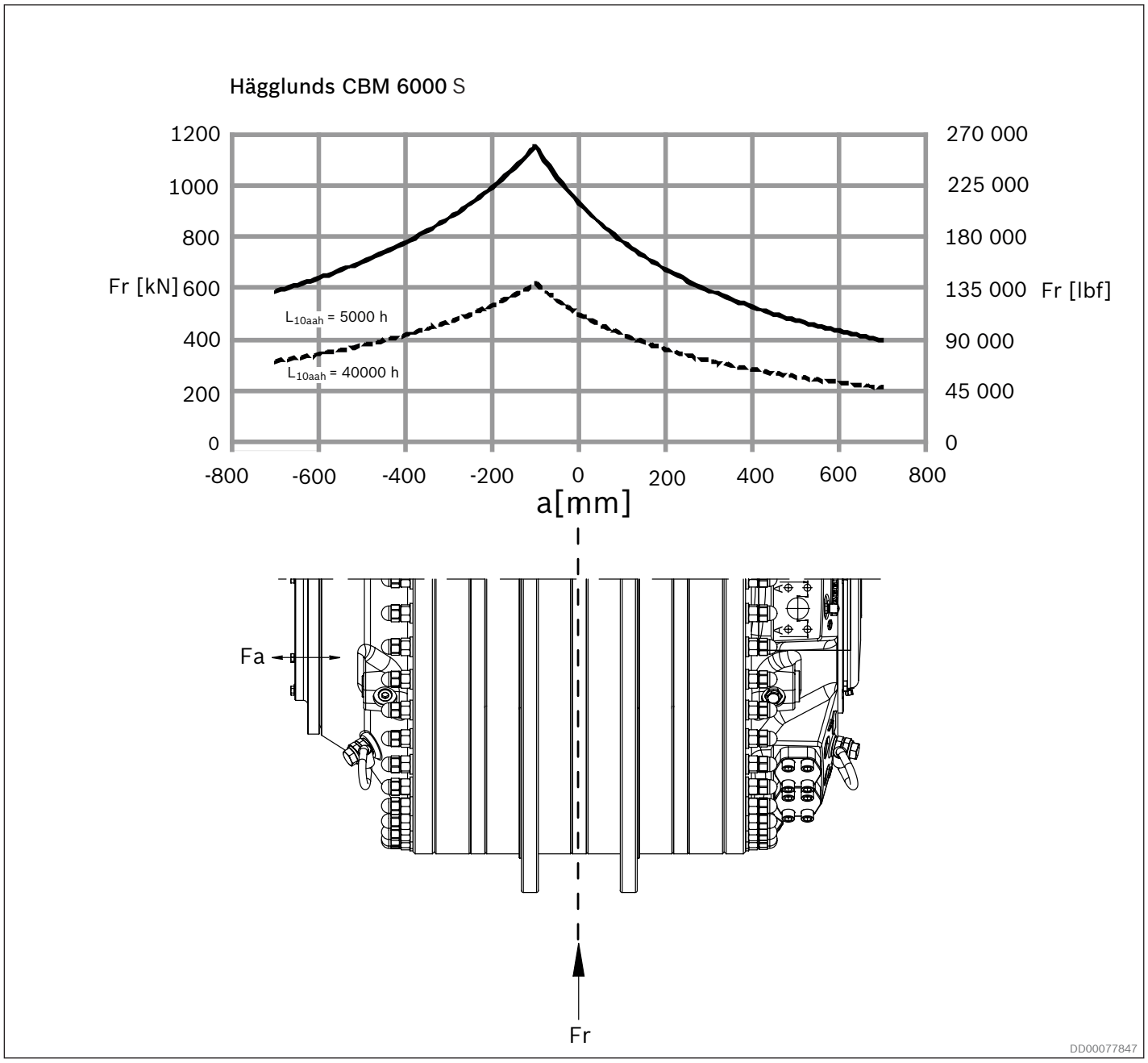

Notice!
When flange mounted motor, please contact Bosch Rexroths representative.

Axial loads: Permissible axial load for intermittent duty F_a = 150 000 N (32 000 lbf).

Remark: For continuous axial load applications, please contact your Bosch Rexroth representative.

4.14.3 Permissible external static load

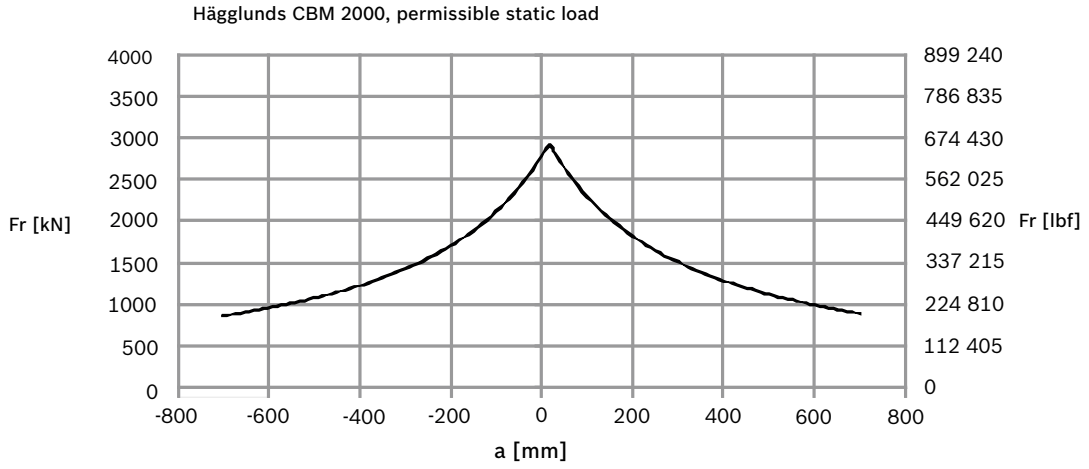

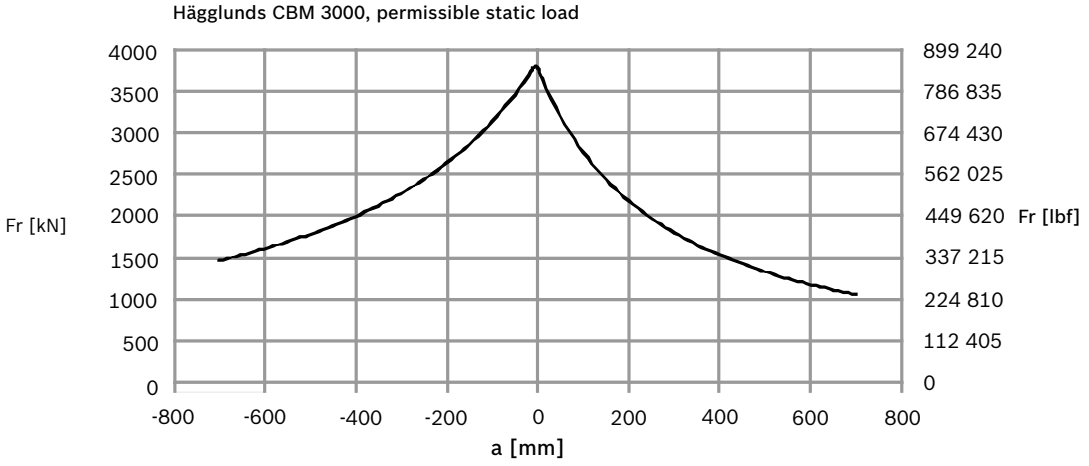

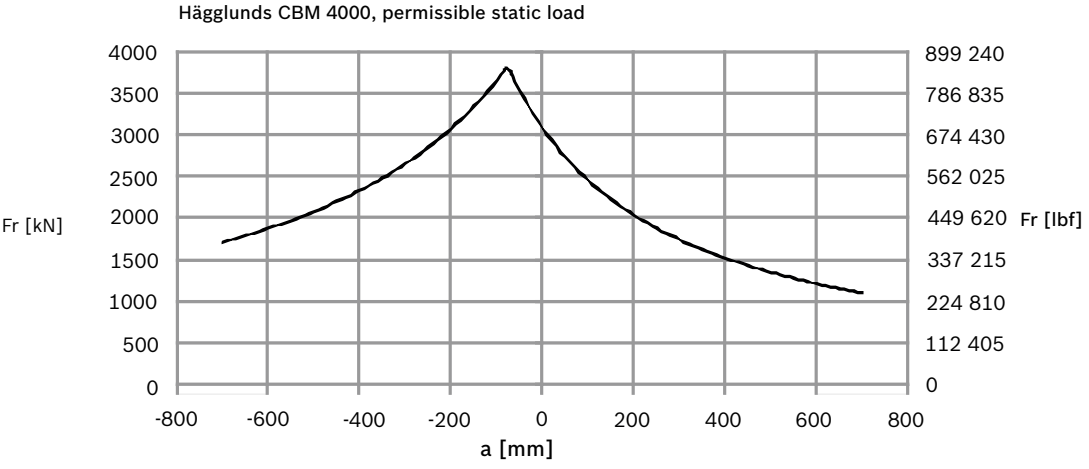

DD00077402

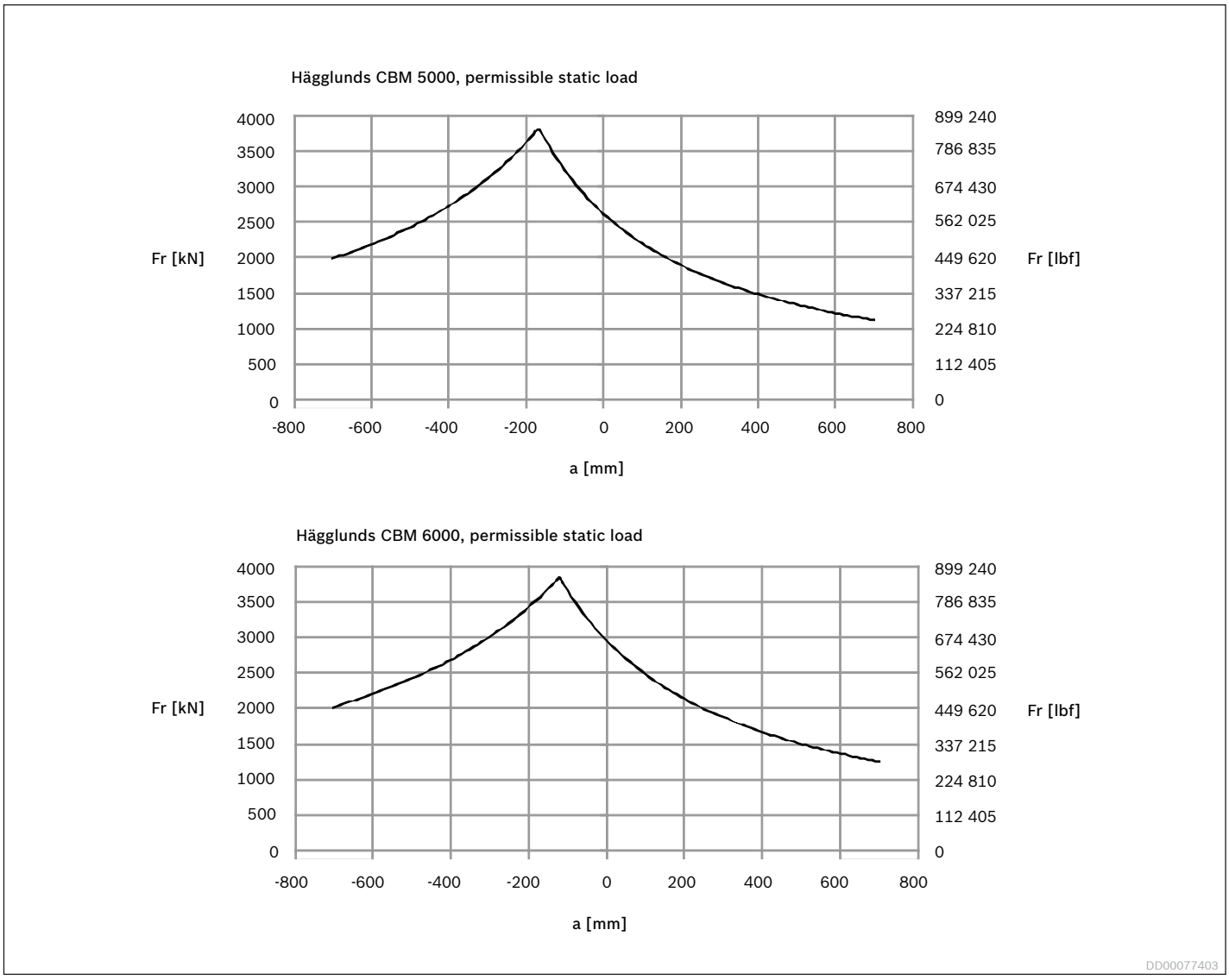
Hägglunds CBM 5000, permissible static load
Fr [kN]
4000
3500
3000
2500
2000
1500
1000
500
0
899 240
786 835
674 430
562 025
449 620
337 215
224 810
112 405
0
Fr [lbf]
-800
-600
-400
-200
0
200
400
600
800
a [mm]
Hägglunds CBM 6000, permissible static load
Fr [kN]
4000
3500
3000
2500
2000
1500
1000
500
0
899 240
786 835
674 430
562 025
449 620
337 215
224 810
112 405
0
Fr [lbf]
-800
-600
-400
-200
0
200
400
600
800
a [mm]
DD00077403

4.15 Low speed performance

For Hägglunds CBm 2000 to CBm 6000

Fig. 64 shows speed deviation factor "i" as function of n_{av}.
A is max. deviation from average speed in r/min.
n_{av} is average speed in r/min.
A = $n_{av} \cdot i$ (rpm)
n_{max} = n_{av} + A (rpm)
n_{min} = n_{av} - A (rpm)

The figure refers to 40 cSt viscosity, and moment of inertia 600 kgm² (14200 lb·ft²).

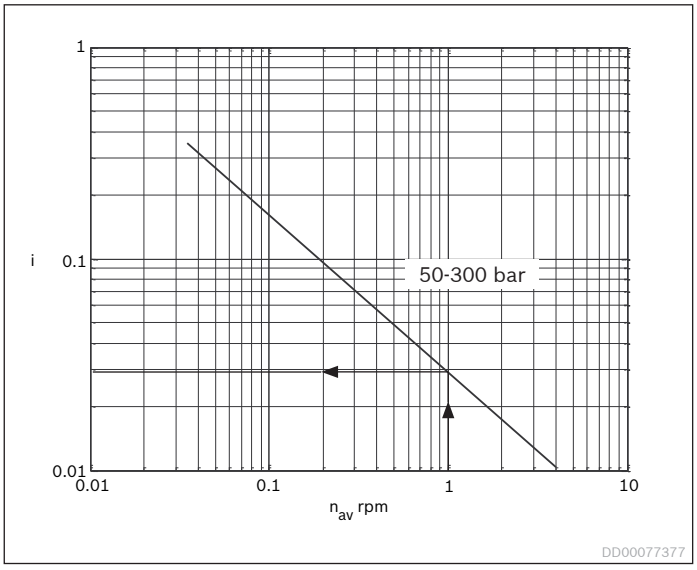

Fig. 64: Speed deviation

Exemple:
n_{av} = 1 gives i = 0,028 (see figure) and A = 1 · 0,028 = 0,03 rpm.
Obtained amplitude value shall be reduced to two decimals.
n_{max} = 1,0 + 0,03 = 1,03
n_{min} = 1,0 - 0,03 = 0,97

Speed variation data was acquired according to ISO 4392-3 where torque on the shaft and flow into the motor is held constant.

In order to obtain smooth operation at low speed it is important to understand that the mechanisms behind speed variation are governed by leakage and friction variation in the motor together with characteristics of the load and the hydraulic system.

When the theoretical flow needed to rotate the motor is in the same order of magnitude or less than the leakage flow there is a risk for speed variation. Friction losses in the motor will increase at low speed due to reduced oil film thickness. Any variation in these friction losses may result in speed variation.

- Speed variation resulting from both friction and leakage will be lower with high case oil viscosity. Recomendation is to have a case oil viscosity between 100-150 cSt.

  The load characteristics on the shaft will also affect speed variation, for example moment of inertia, friction effects and natural frequency.

- Smooth operation at low speed is enhanced by a constant flow source, like a flow control valve or a small pump that is not operating in its lower displacement range.

  Compressibility of hydraulic oil volume between flow source and motor and deformation of hoses may also result in speed variation, especially if the natural frequency of the hydraulic system and the load is close to each other.

- Therefore, smooth operation is enhanced by a stiff hydraulic system connecting the flow source and the motor, i.e. using short pipings with small dimension.

4.16 Magnetic plug

4.16.1 General

A magnetic plug is mounted as standard in the Hägglunds CBm from factory. By regularly inspecting the magnetic plug a malfunction of the hydraulic system can be detected and corrected. The magnetic plug can also be used for early detection of wear or spall damages in the motor.
The magnetic plug is installed in connection T8, in the drain outlet D3. If other drain outlet is used (D1-D2, D4-D8), the magnetic plug should be moved to the connection (T7 or T9) in the selected drainage.

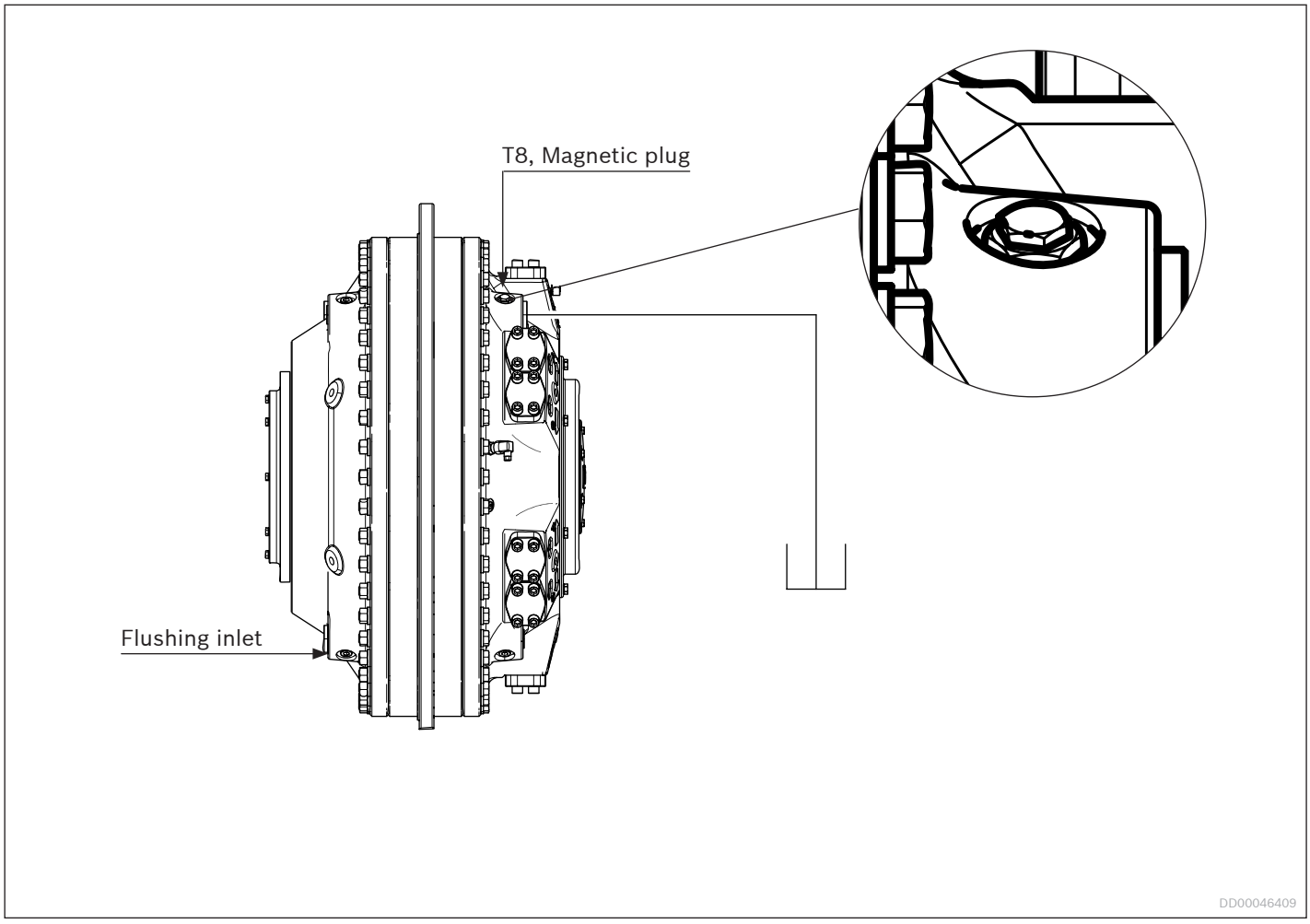

Fig. 65: Magnetic plug mounted on CBm 2000

For inspection and maintenance routines, see *Installation and maintenance manual*: RE 15300-WA.

4.17 Temperature sensor

4.17.1 Function

A temperature sensor is mounted as standard in the motor case and operates according to the hydraulic fluid temperature variation. The sensor element is a Pt100 resistance sensor, which change resistance in relation to the fluid temperature in the motor case.

4.17.2 Technical data, Pt 100/4-20 mA sensor

Material ID: R939005085 Temperature sensor
Item number: 577 7112-083 Temperature sensor

Table 9: Technical data, Pt 100/4-20 mA sensor

Sensor length l	60 mm (2.36“)
Process connection	G 1/4“
Degree of protection	IP65
Type of sensor element	Pt 100
Output	4-20 mA / 0..100 ºC (32...212 ºF)
Connector	DIN 43650 screw terminals
Cable connection	Pg9 cable Ø6-8 mm
Electrical connection	2-wire connection
Connection	Pin 1 - Ub Pin 2 – 4-20 mA output
Supply voltage Ub	7.5 - 30 VDC
Reverse polarity protection	Yes
Max, load	750 W at 24 V ((Ub - 7.5 V)/0.022)

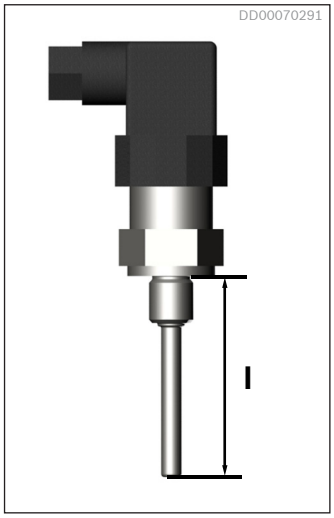

Fig. 66: Temperature sensor

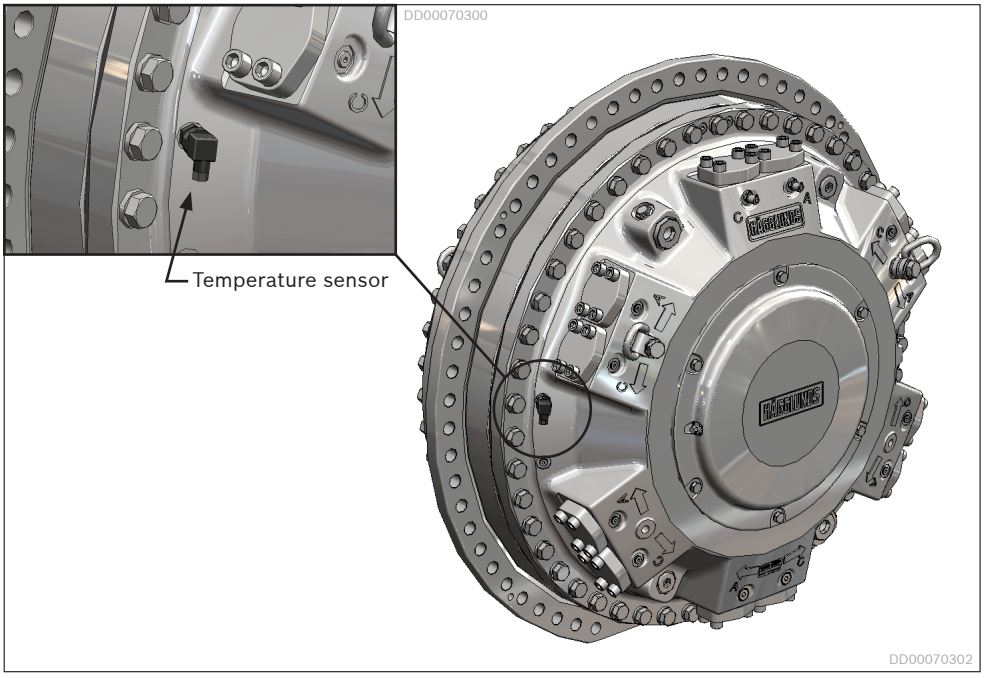

Fig. 67: Temperature sensor

4.18 Painting system

Corrosion protection

The painting system of Hägglunds motors and accessories are avalible in two different corrosivity categories regarding corrosion protection in accordance with SS-EN ISO 12944:

- C3 - Corrosivity category Medium - which is recommended for normal urban and industrial atmosphere.
- C5M - Corrosivity category Very High - which is recommended for marine environment with high salt load or other aggressive atmosphere.

Colour

Standard colour for Hägglunds motors and accessories is orange (RAL 2002)

5 Type of seal

Option N:

NBR (Nitrile) Preferd alternative at low ambient temperatures and moderate case oil temperatures.
See section *4.2: General data*

Option V:

FPM (Viton) Preferd alternative at higher case oil temperatures and freewheeling at higher speed or operating with fire resistant fluids. See section *4.2: General data*, *4.13.4: Power loss freewheeling* and Data sheet RE 15414

6 Increased robustness

Option A:

CBm has DLC-coated pistons and piston rings as standard. That give no limitation for low speed even down to 0,03 rpm at maximum pressure.

Option C:

DLC-coated cam rollers in combination with coated pistons and piston rings is recommended to be used in the following cases:
- When replacing an existing MB-motor with a CBm-motor and operating parameters (eg. viscosity) are unclear
- If there is a risk for cavitation in combination with shock loads
- If oil viscosities is below 20 cSt in motor case

7 Through hole kit

This device makes it possible to flush through the driven shaft or to draw electric cables through the motor. The through hole kit is prepared for rotation speed sensor.

Dimension drawing
See chapter*12: Related documents*

Ordering code
See ordering code for Hägglunds CBm section *1: Ordering code*.

Table 10: Dimensions Hägglunds CBm with trough hole kit

	L1					
	Splines		Shrink disc			
			Ø 360		Ø 340	
Motor	mm	in	mm	in	mm	in
CBm 2000	863	33,98	1082	42.60	1030	40.55
CBm 3000	973	38,31	1200	47.24	–	–
CBm 4000	1091	42,95	–	–	–	–
CBm 5000	1210	47,64	–	–	–	–
CBm 6000	1328	52,28	–	–	–	–

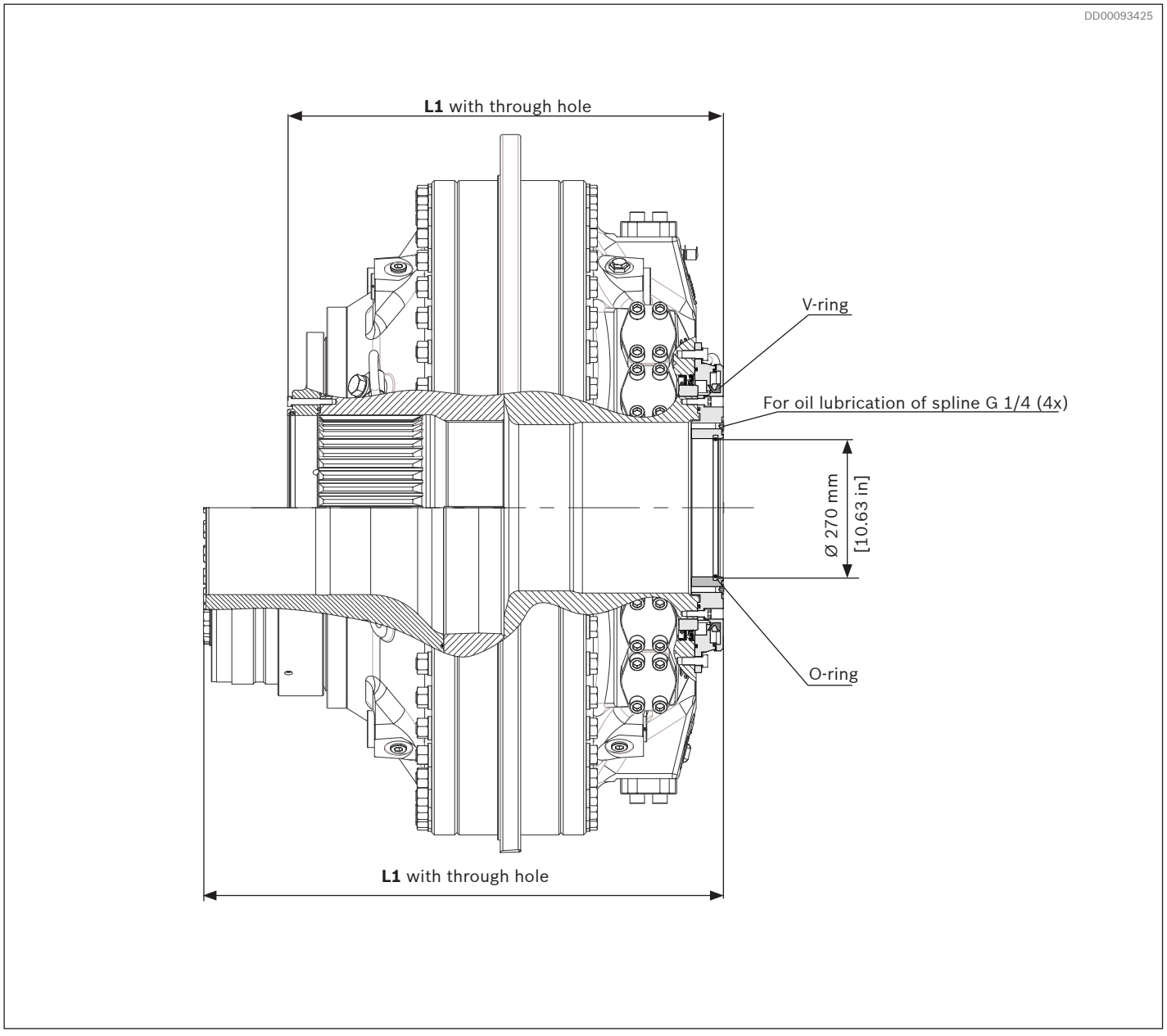

Fig. 68: Example: Hägglunds CBm 2000 with Through hole kit.

8 Dimensions / Interface

8.1 Dimensions

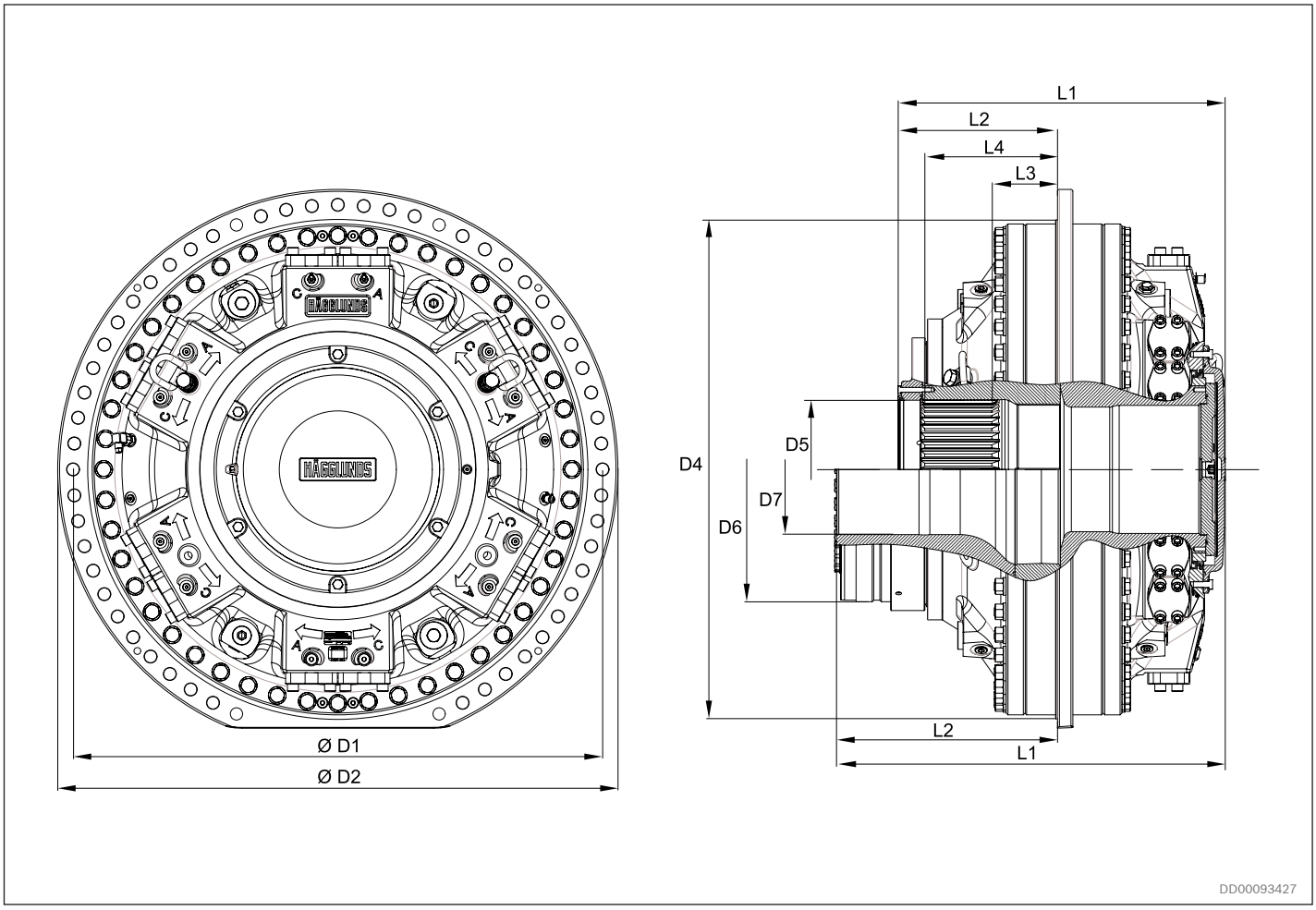

Fig. 69: CBm 2000

Table 11: Dimensions CBm 2000

			Dimensions					
			Splines		Shrink disc			
					C		E	
			mm	in	mm	in	mm	in
D1	Pitch diameter		1380	54.33	1380	54.33	1380	54.33
D2	Outer diameter		1460	57.48	1460	57.48	1460	57.48
D4	Guide diameter		1300	51.18	1300	51.18	1300	51.18
D5	Spline size	DIN 5480	N360 x 8 x 30 x 44 x 9H		-	-	-	-
D6	Shrink disc diameter		-	-	720	28.35	690	27.16
D7	Hollow shaft diameter				360	14.17	340	13.39
L1	Total length	***Without through hole***	855	33.66	1072	42.20	1018	40.08
L2	Length to hollow shaft		416	16.38	620	24.41	576	22.68
L3	Length to spline end		171	6.73	-	-	-	-
L4	Length to spline		346	13.62	-	-	-	-

For dimensional drawings CBm 2000, see chapter *12: Related documents*

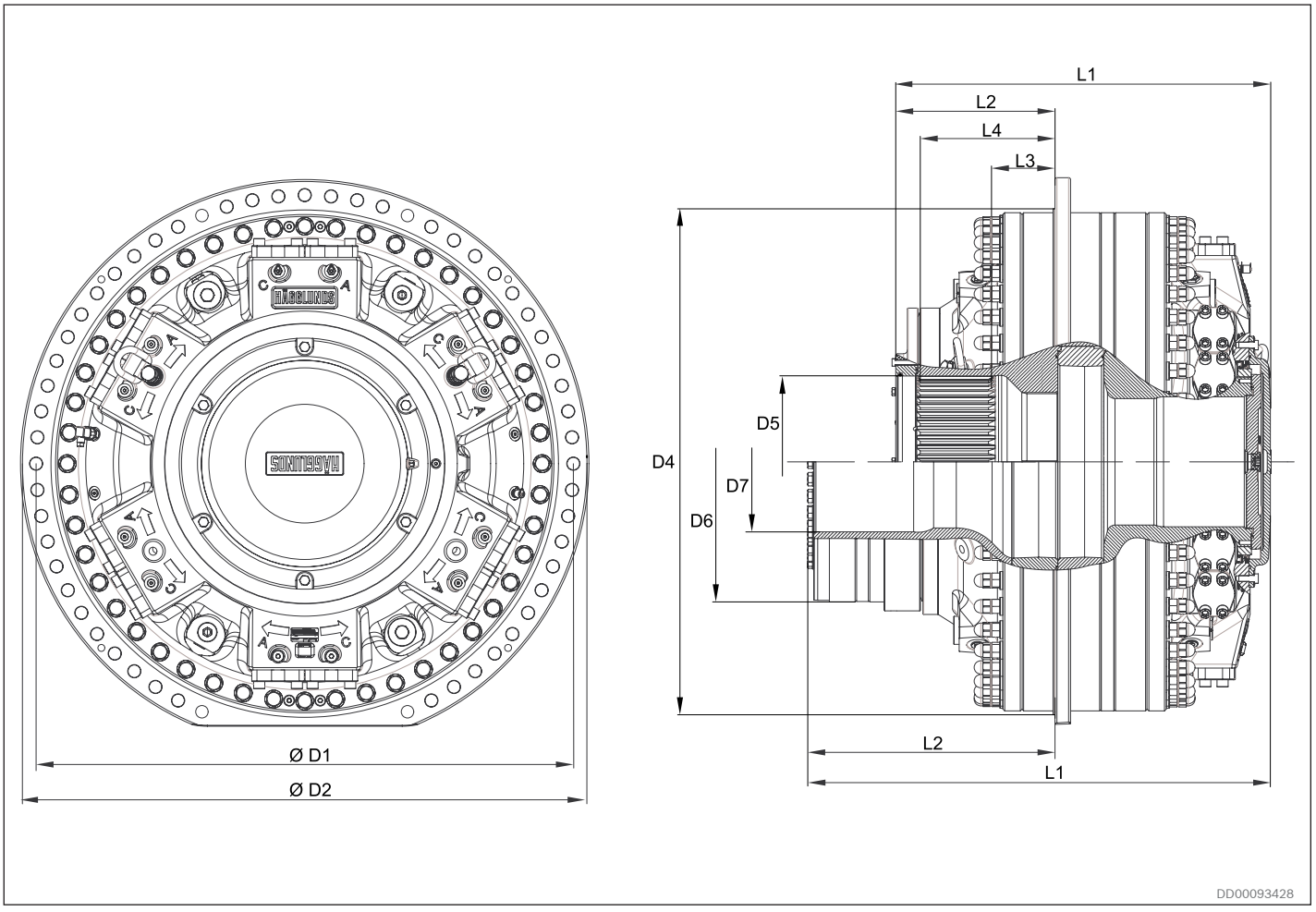

Fig. 70: CBm 3000

Table 12: Dimensions CBm 3000

		Dimensions			
		Splines		Shrink disc	
		mm	in	mm	in
D1	Pitch diameter	1380	54.33	1380	54.33
D2	Outer diameter	1460	57.48	1460	57.48
D4	Diameter of guide edge	1300	51.18	1300	51.18
D5	Spline size DIN 5480	N440 x 8 x 30 x 54 x 9H		-	-
D6	Shrink disc diameter	-	-	720	28.35
D7	Hollow shaft diameter	-	-	360	14.17
L1	Total length ***Without through hole***	965	37.99	1190	46.85
L2	Length to hollow shaft	409	16.10	620	24.41
L3	Length to spline end	171	6.73	-	-
L4	Length to spline	346	13.62	-	-

For dimensional drawings CBm 3000, see chapter *12: Related documents*

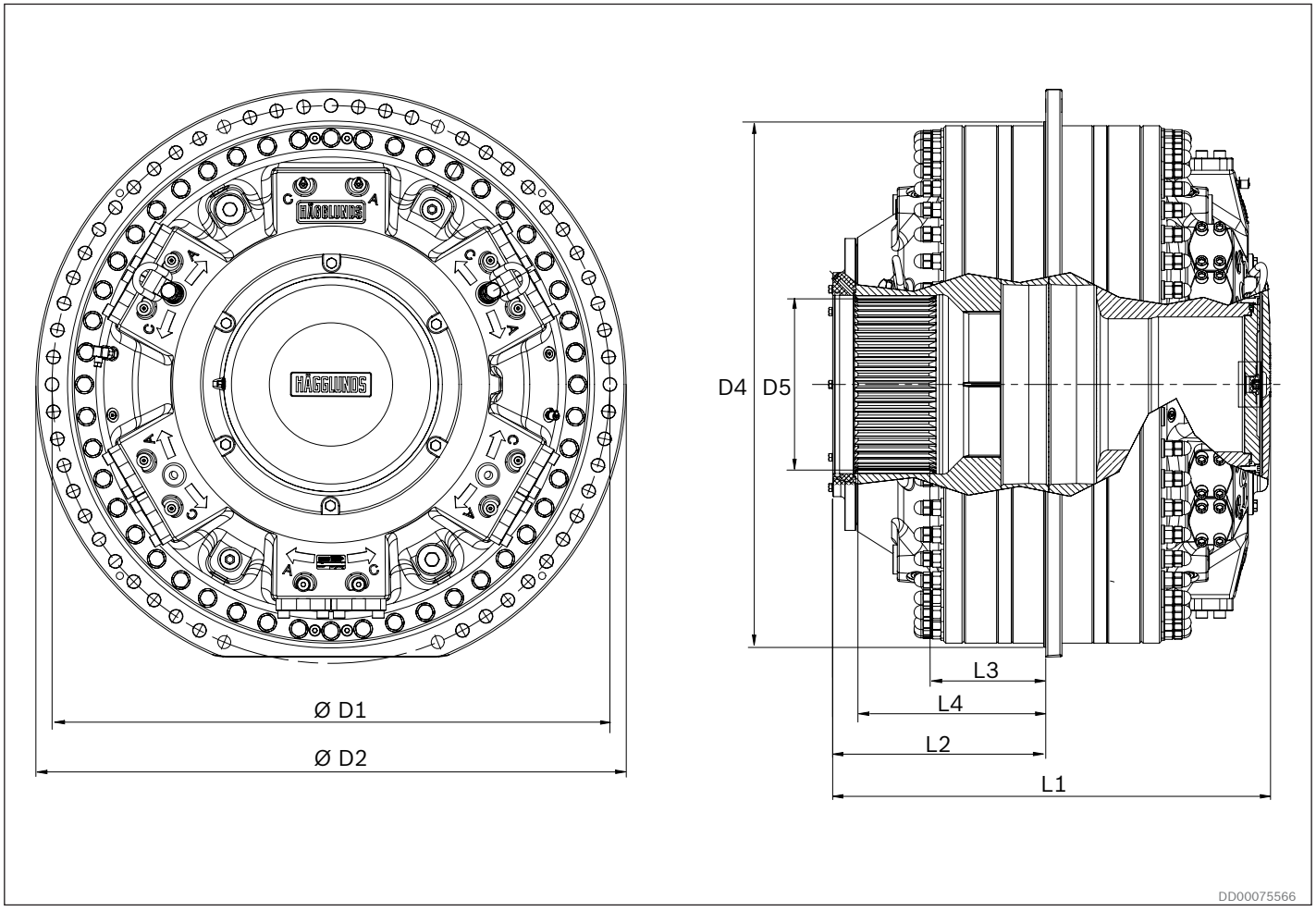

Fig. 71: CBm 4000

Table 13: Dimensions CBm 4000

		Dimensions	
		mm	**in**
D1	Pitch diameter	1380	54.33
D2	Outer diameter	1460	57.48
D4	Guide diameter	1300	51.18
D5	Spline size DIN 5480	N440 x 8 x 30 x 54 x 9H	
L1	Total length ***Without through hole***	1083	42.64
L2	Length to hollow shaft	527	20.75
L3	Length to spline end	289	11.38
L4	Length to spline	464	18,27

For dimensional drawings CBm 4000, see chapter *12: Related documents*

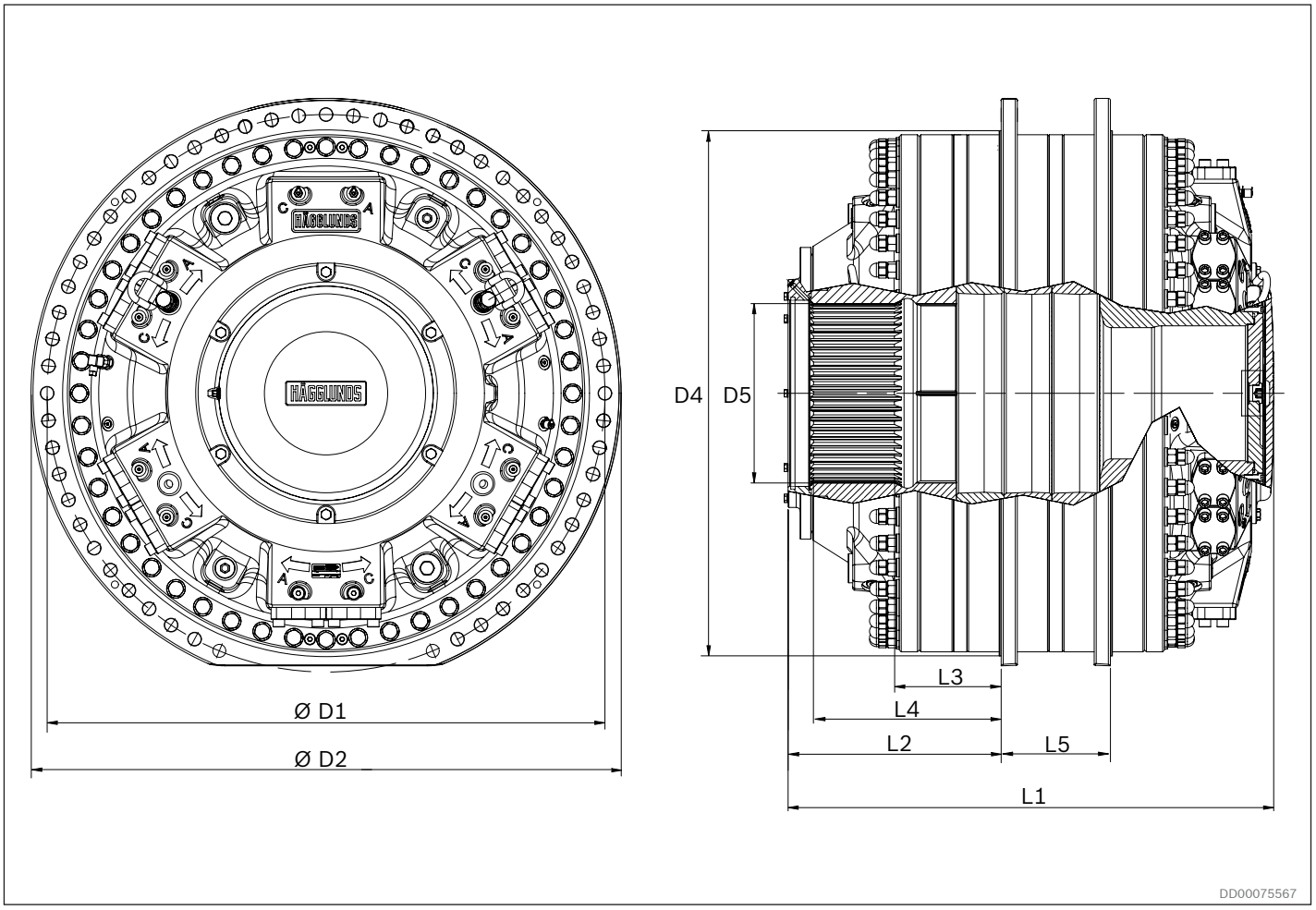

Fig. 72: CBm 5000

Table 14: Dimensions CBm 5000

		Dimensions	
		mm	**in**
D1	Pitch diameter	1380	54.33
D2	Outer diameter	1460	57.48
D4	Guide diameter	1300	51.18
D5	Spline size DIN 5480	N460 x 8 x 30 x 56 x 9H	
L1	Total length ***Without through hole***	1201	47.28
L2	Length to hollow shaft	526.5	20.73
L3	Length to spline end	263.5	10.37
L4	Length to spline	463.5	18.25
L5	Length between flanges	270	10.63

For dimensional drawings CBm 5000, see chapter *12: Related documents*

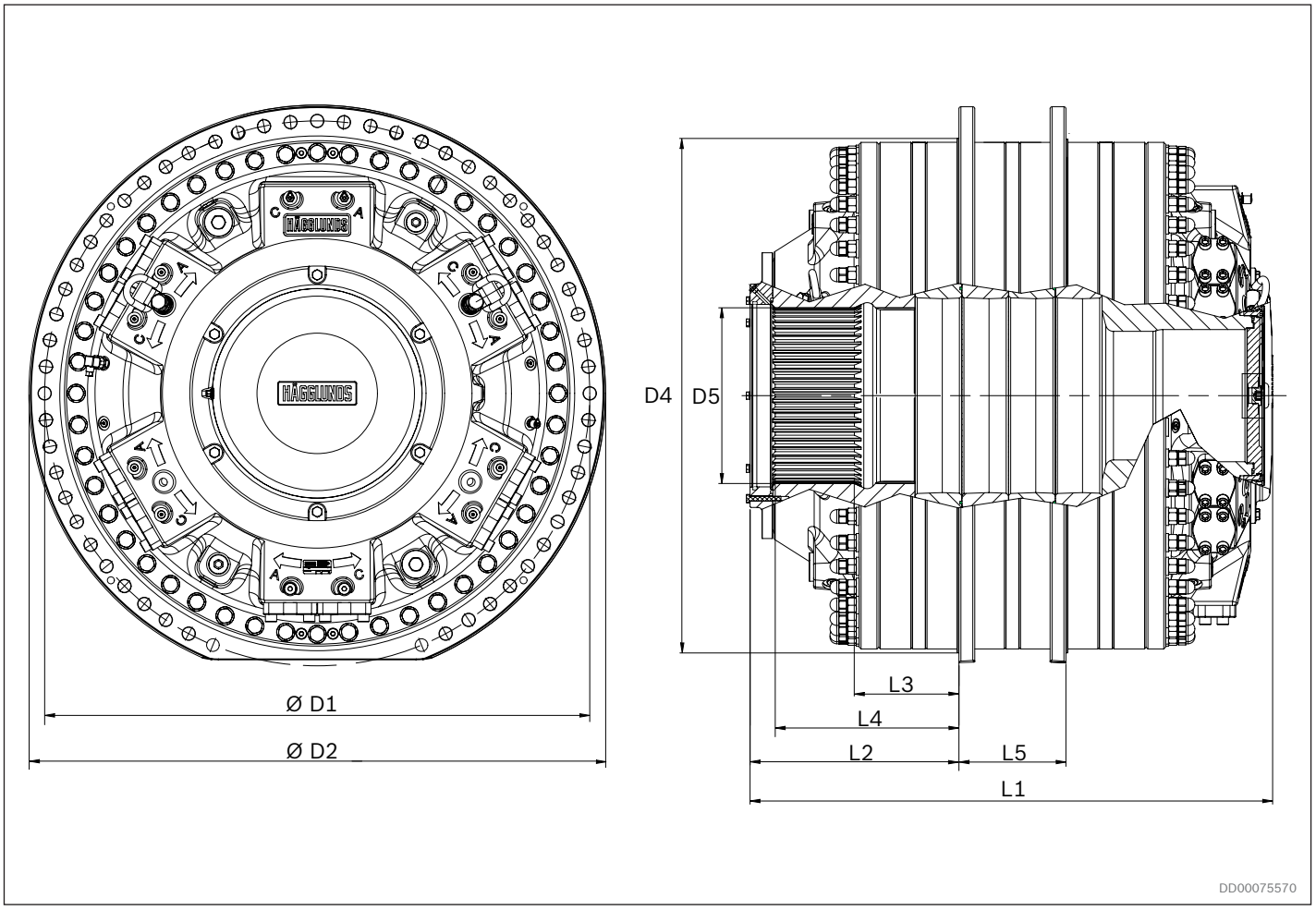

Fig. 73: CBm 6000

Table 15: Dimensions CBm 6000

		Dimensions	
		mm	**in**
D1	Pitch diameter	1380	54.33
D2	Outer diameter	1460	57.48
D4	Guide diameter	1300	51.18
D5	Spline size DIN 5480	N460 x 8 x 30 x 56 x 9H	
L1	Total length **Without through hole**	1320	51.97
L2	Length to hollow shaft	526.5	20.73
L3	Length to spline end	263.5	10.37
L4	Length to spline	463.5	18.25
L5	Length between flanges	270	10. 63

For dimensional drawings CBm 6000, see chapter *12: Related documents*

9 Mounting alternatives

9.1 General information

With splines for flange or torque arm mounting.
The splines shall be lubricated, and filled with hydraulic oil at assembly, or filled with transmission oil from the connected gearbox. To avoid wear in the splines, the installation must be within the specified tolerances in *Fig. 74: Flange mounting for CBm 2000 to 4000.*

For requriements of spline shaft, see chapter *12: Related documents*

9.2 Flange mounting with splines

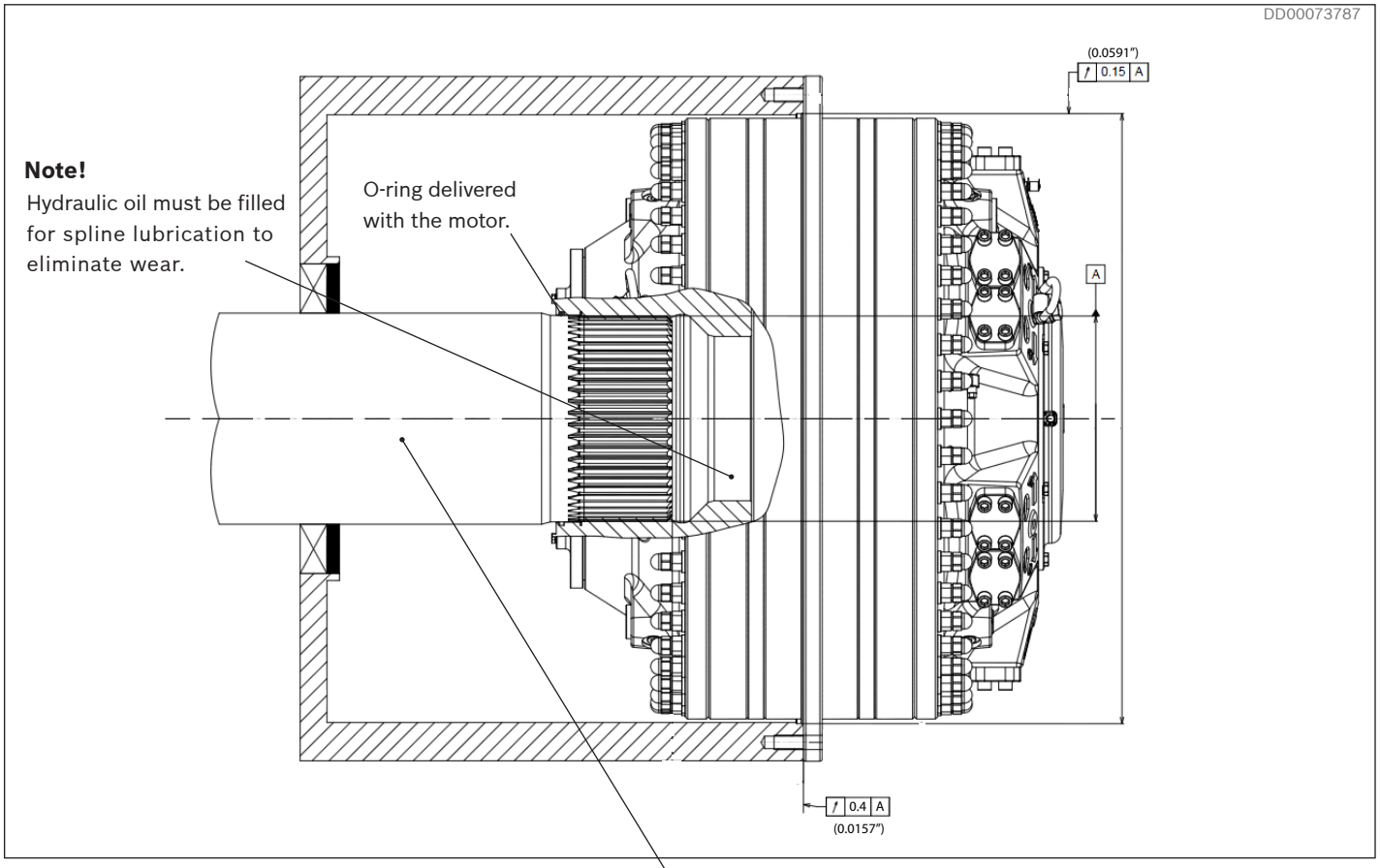

Fig. 74: Flange mounting for CBm 2000 to 4000.

Features

- Possibility to use the motor as a one side shaft support bearing.
- Oil lubrication of splines give no wear.
- Easy mounting of motor to driven shaft.

For installation drawings spline shaft flange mounting, see chapter *12: Related documents*

Note!

Flange mounting gives high risk for overloading of motor main bearings. Always check that the shaft and motor bearings are statically determined.

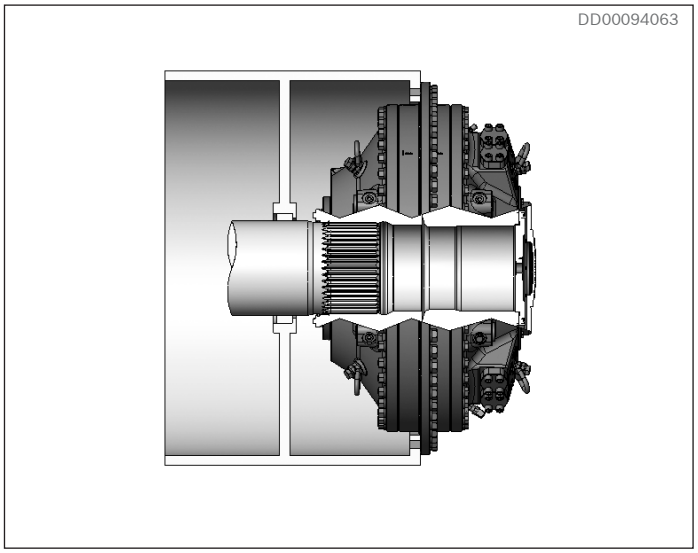

Fig. 75: Flange mounted motor with splines and low radial load from driven shaft.

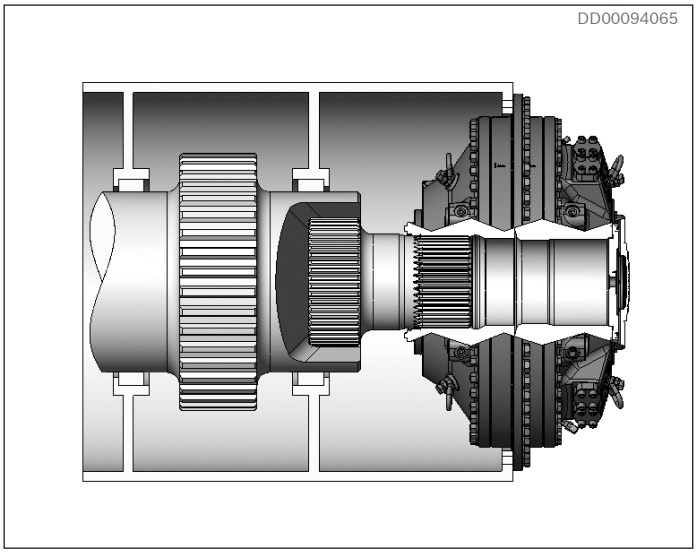

Fig. 76: Flange mounted motor with splines and high radial load from driven shaft .

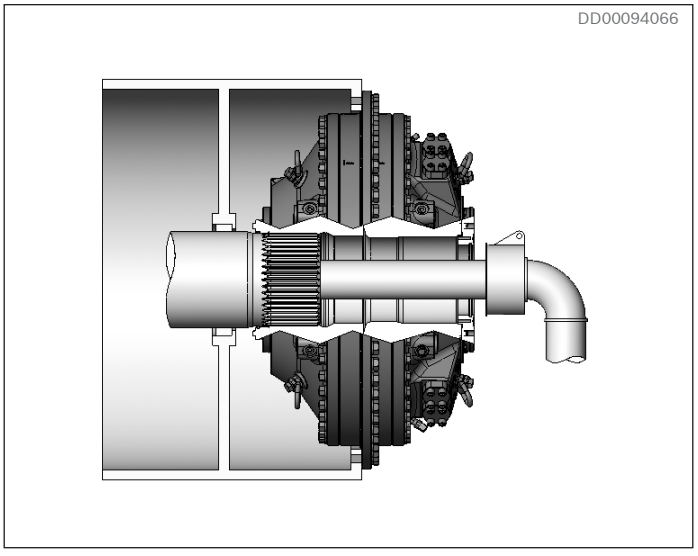

Fig. 77: Flange mounted motor with splines and through hole for cooling of the driven machine.

Table 16: Recommended material in the splineshaft

Drive	Steel with yield strenght
Unidirectional drive	Rel_{min} = 450 N/mm² (65 000 lb/ft²)
Bidirectional drive	Rel_{min} = 700 N/mm² (101800 lb/ft²)

Table 17: Spline designation shaft

	Spline		
Frame size	**CBm 2000**	**CBm 3000/4000**	**CBm 5000/6000**
Designation: Standard DIN 5480	W360x8x30x44x8f	W440x8x30x54x8f	W460x8x30x56x8f

9.3 Torque arm mounting with splines

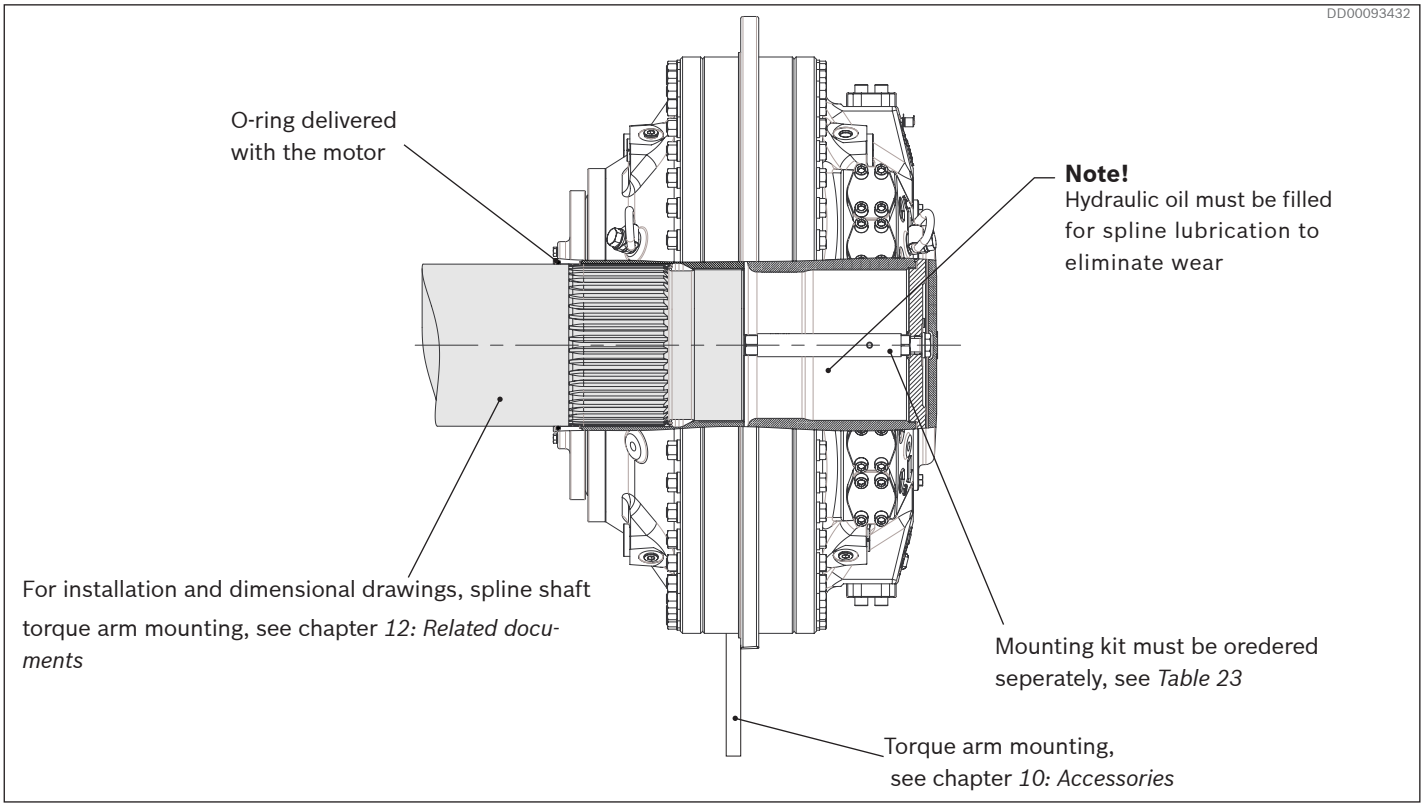

Fig. 78: Torque arm mounting motor with splines

9.4 Vertical mounting with splines

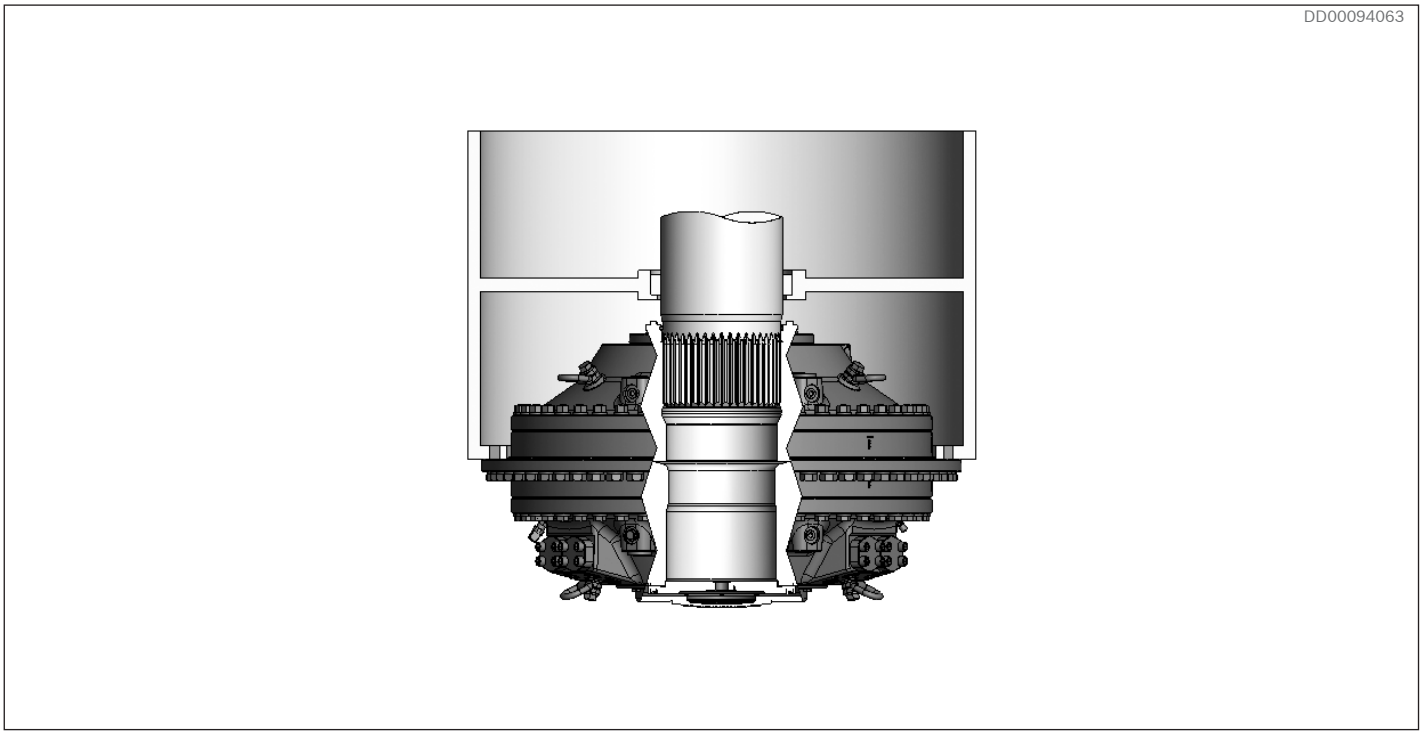

Fig. 79: Vertical, flange mounted motor with splines

9.5 Torque arm mounting on plain shaft

Valid for CBm 2000 and CBm 3000

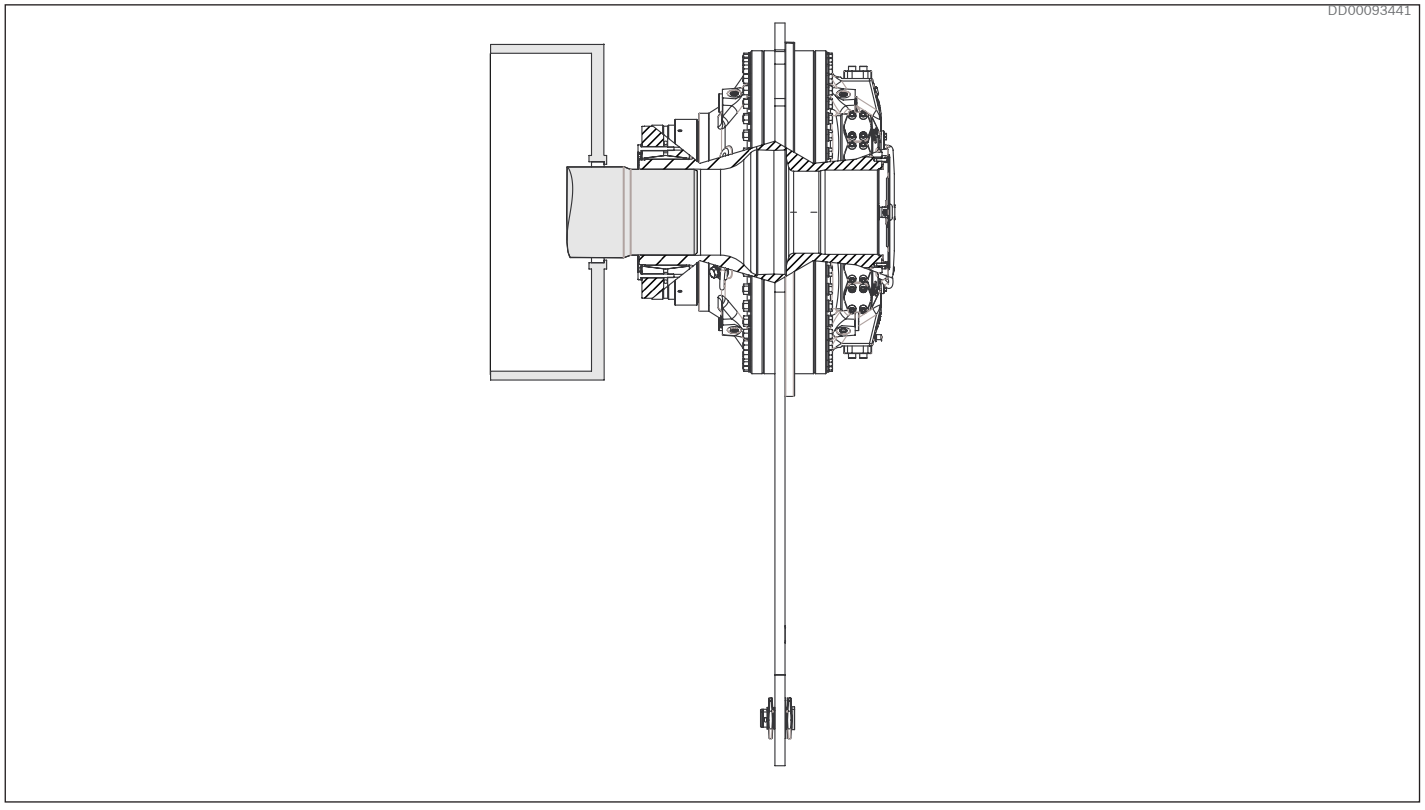

Fig. 80: Torque arm mounted motor with coupling shaft

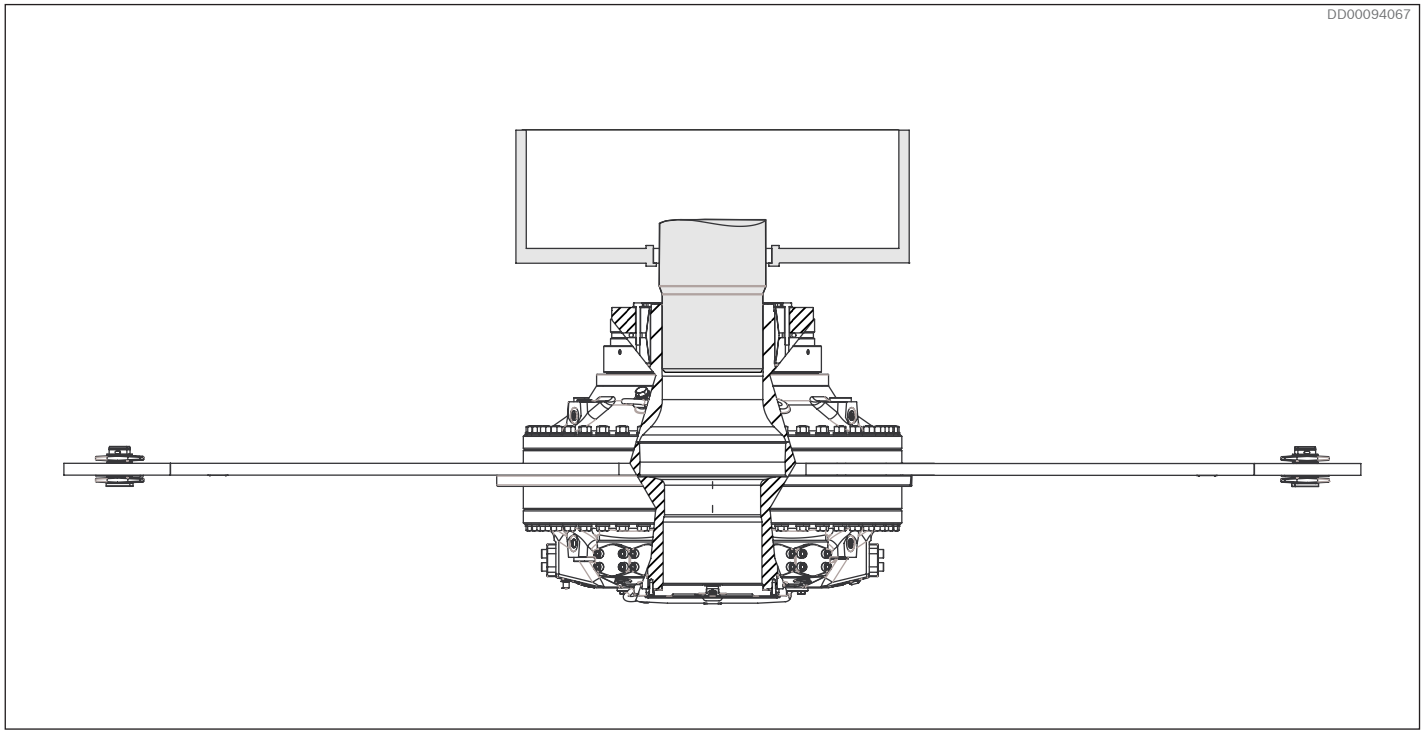

Fig. 81: Vertical torque arm mounted motor with coupling shaft

Dimensions and material for shaft end, plain shaft

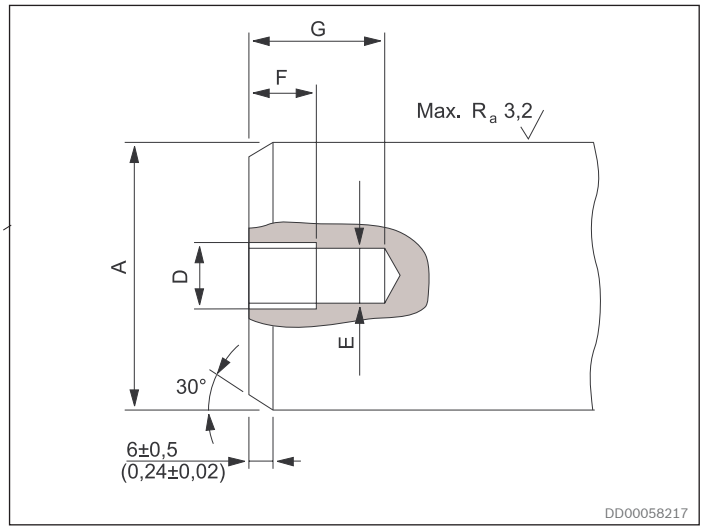

Fig. 82: Shaft end, normally loaded

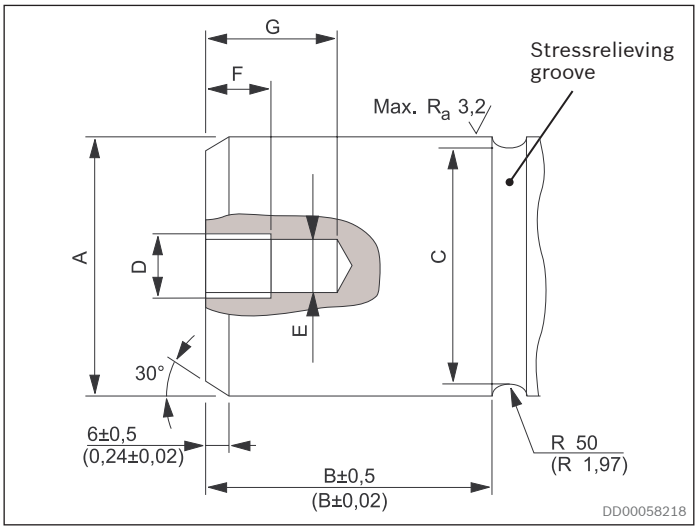

Fig. 83: Shaft end, heavily loaded

Design of driven shaft end on normally loaded shaft
In drives with only one direction of rotation and/or load where the stresses in the shaft are moderate, the shaft can be plain.

Design of driven shaft end on heavily loaded shaft.
Where the driven shaft is heavily loaded and is subject to high stresses, for example for changes in the direction of rotation and/or load, it is recommended that the driven shaft should have a stress relieving groove.

Table 18: Threads for assembly tool (plain shaft)

Measures	Dimensions, threads for assembly tool			
D	M20		UNC 5/8"	
E	>17 mm	0,67 in	>13,5 mm	0,53 in
F	25 mm	0,98 in	22 mm	0,87 in
G	50 mm	1,97 in	30 mm	1,18 in

Table 19: Recommended material in the shaft

Drive	Steel with yield strenght
Unidirectional drive	Rel_{min} = 300 N/mm²
Bidirectional drives	Rel_{min} = 450 N/mm²

Table 20: Shaft recommendations

Dim		CBm 2000	CBm 2000 CBm 3000	CBm 3000 CBm 4000	CBm 5000 CBm 6000
A	**mm**	ø340 -0,018 -0,075	ø360 -0,018 -0,075	ø460 -0,020 -0,083	ø480 -0,020 -0,083
	in	13.3858 -0,00068 -0,00292	ø14,1732 -0,00068 -0,00292	ø18,1102 -0,00075 -0,00323	ø18,8976 -0,00075 -0,00323
B	**mm**	215	257	300	320
	in	8,46	10,12	11,81	12,60
C	**mm**	334	354	454	474
	in	13,15	13,94	17,87	18,66

Note! The dimensions are valid at +20 °C (68 °F)

9.6 Submerged mounting with splines

Valid for Hägglunds CBm 2000 to CBm 4000.

The motor is designed for flange mounted spline motors and submerged applications.

The dimensional drawing for design of flange, and item number for O-rings, see chapter *12 Related documents*.

Data
Max depth in water is 70 meter.

To order
O-rings, see Dimension drawing submerged applications chapter *12 Related documents*.
Special index motor S-11, prepared for submerged applications.
Painting system C5M-Corrosivity category Very High is recommended.

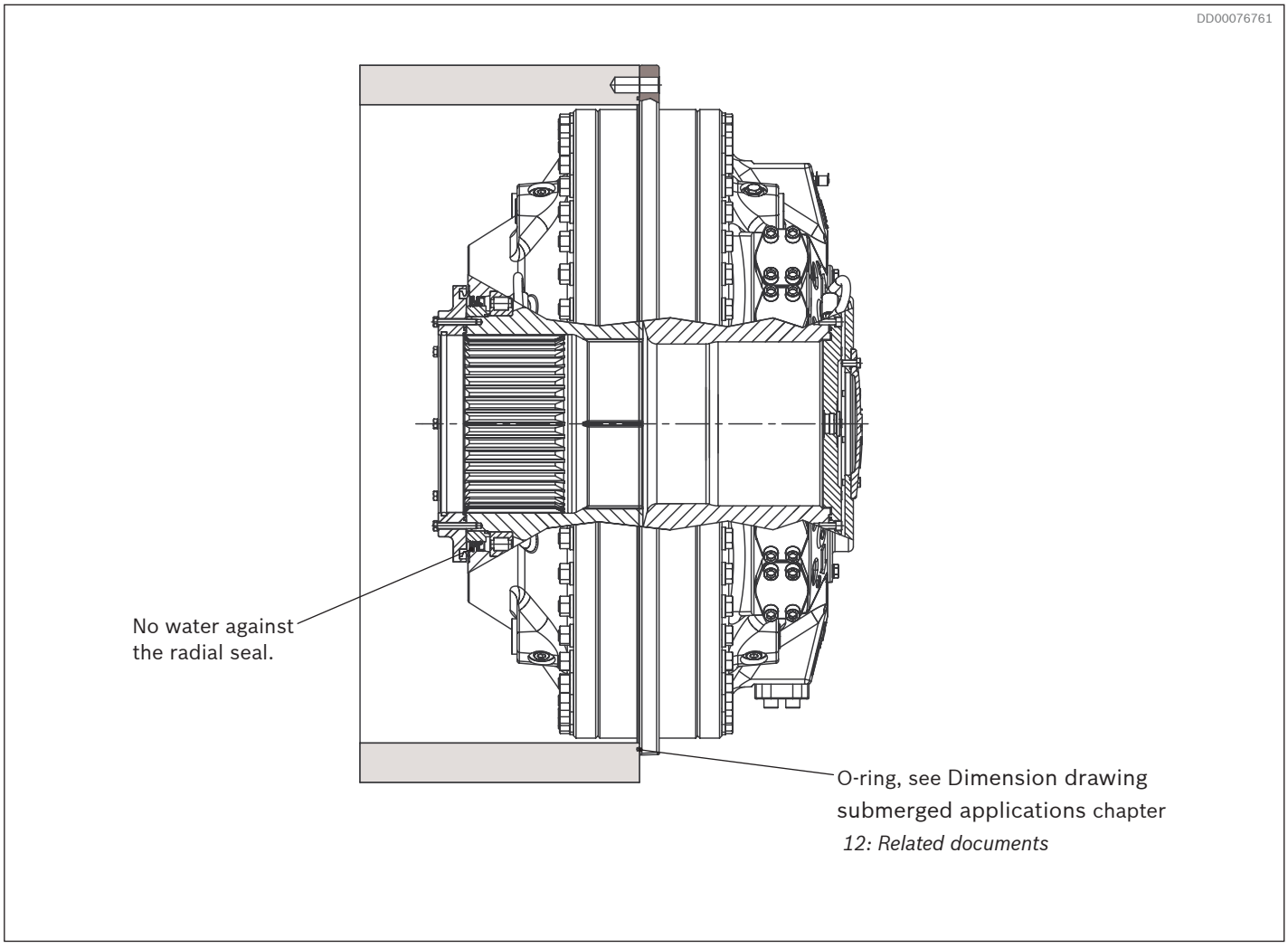

Fig. 84: Submerged aplication with spline

10 Accessories

10.1 Torque arms

Mounting alternatives

Dimensions, techical data, order code and material ID for torque arms, see separate data sheet: **RE 15355**

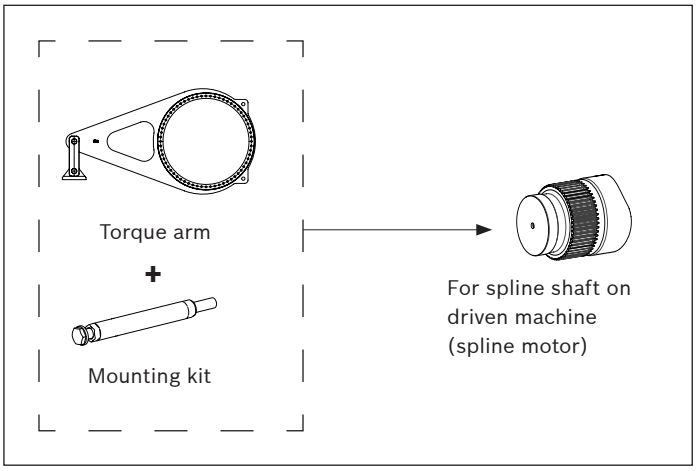

Fig. 85: Single ended torque arm mounting for spline shaft, only allowed for CBm 2000 to CBm 4000 (Not allowed for CBm 5000 to CBm 6000)

Features

- Easy mounting i.e. no alignment problems.
- Quick mounting of motor to driven shaft
- Robust torque-transmitting.
- Controlled external forces on driven shaft.
- Space saving. i.e. close mounting to the driven machine.

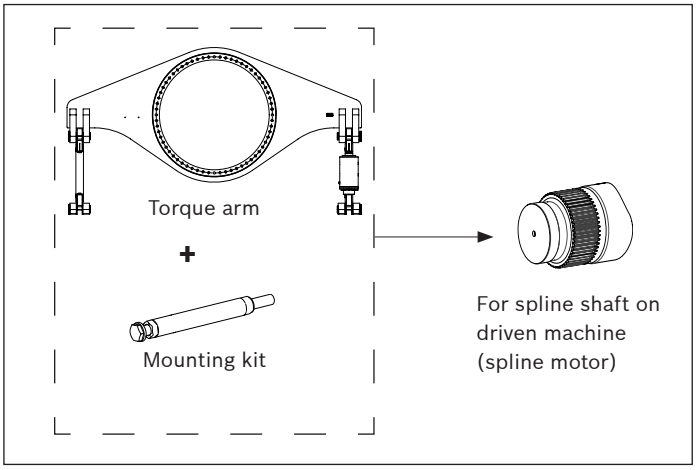

Fig. 86: Double ended torque arm mounting for spline shaft

Features

- Easy mounting i.e. no alignment problems.
- Quick mounting of motor to driven shaft
- Robust Torque-transmitting.
- Reduction of external forces on driven shaft.

Note!

Single ended torque arms only allowed for CBm 2000 to CBm 4000 (Not allowed for CBm 5000 to CBm 6000)

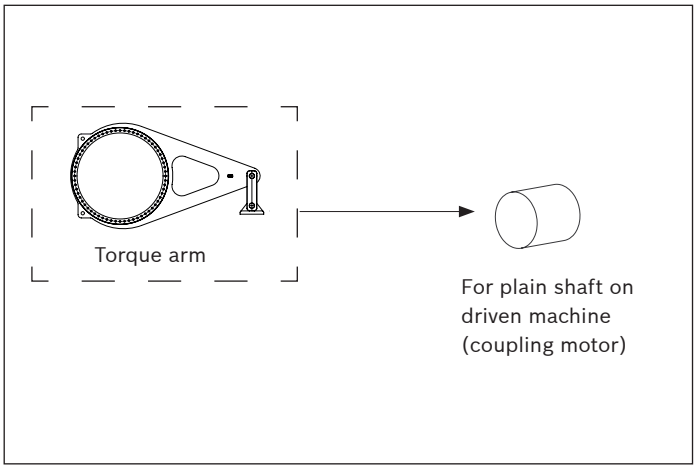

Fig. 87: Single ended torque arm mounting for plain shaft (Only for CBm 2000 and CBm 3000 coupling version)

Features

- Easy mounting i.e. no alignment problems.
- Simplified machining of customer shaft.
- Controlled external forces on driven shaft.

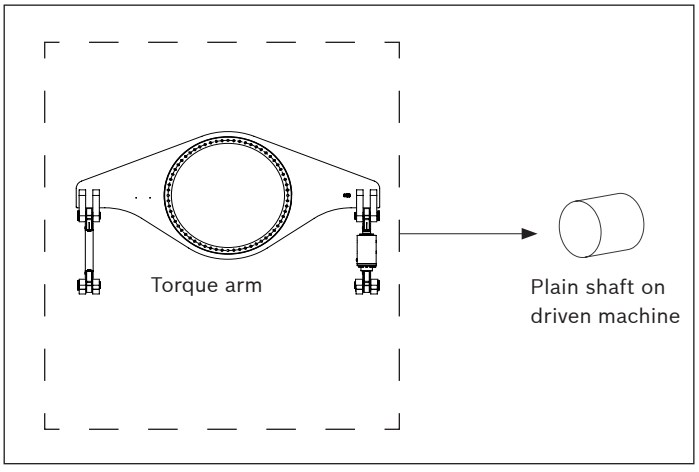

Fig. 88: Double ended torque arm mounting with plain shaft (Only for CBm 2000 and CBm 3000 coupling version)

Features

- Easy mounting i.e. no alignment problems.
- Simplified machining of customer shaft.
- Reduction of external forces on driven shaft.

10.2 Coupling adapter

The coupling adapter includes shrink disk and adapter shaft.
Mounting kit must be ordered separately.
The coupling adapter is designed only for torque arm mounting.

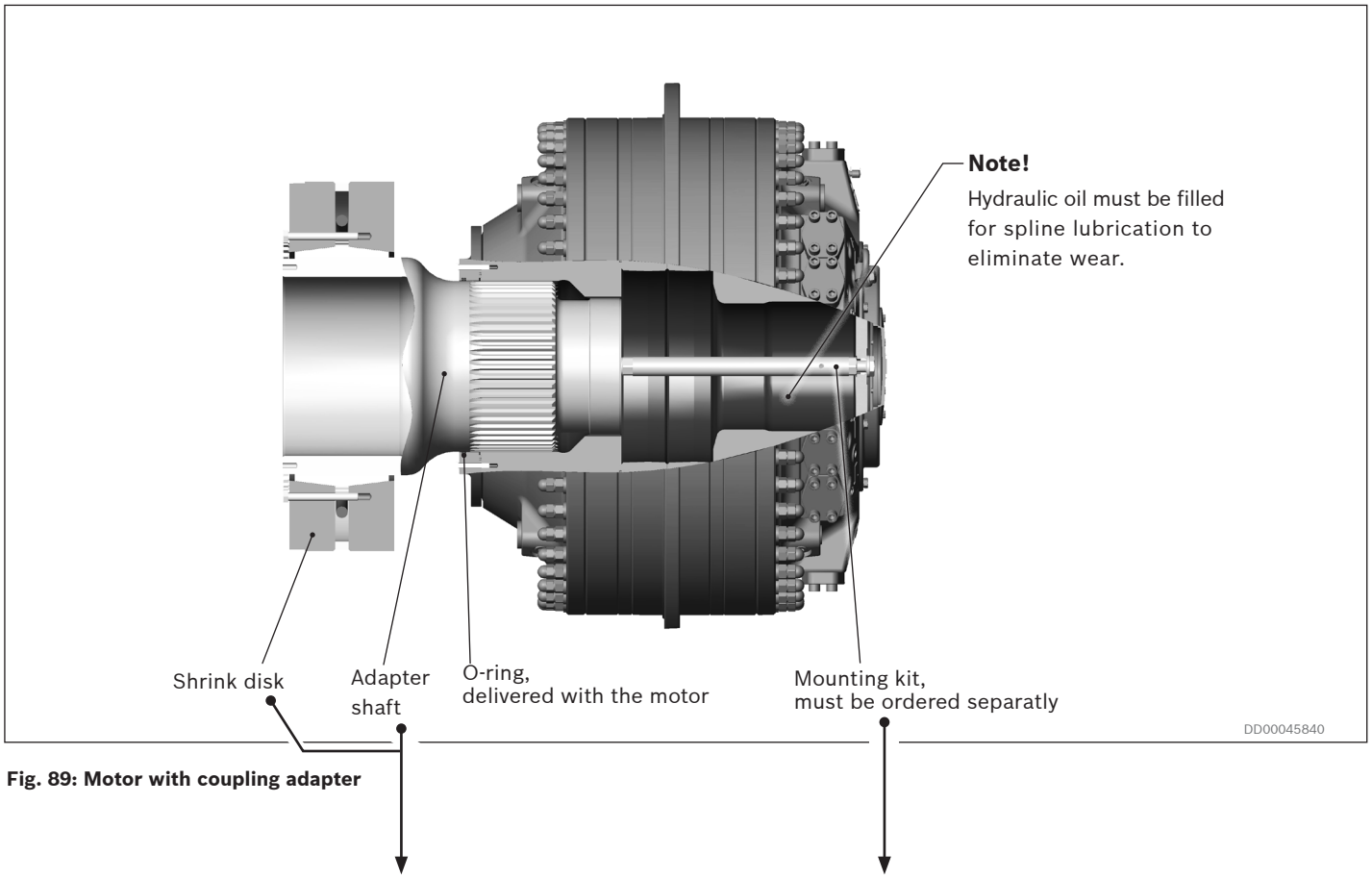

Fig. 89: Motor with coupling adapter

Table 21: Material ID Coupling adapter for CBm 2000 motors

Motor type / shaft diameter	Material ID	Material ID
CBm 2000 Ø 340	R939067582 [1]	
CBm 2000 Ø 360	R939055538 [2]	R939055544 [3]

[1] Max pressure CBm 2000 1800 310 bar (4500 psi) and CBm 2000 2000 280 bar (4100) psi
[2] Unidirectional drive with nominal torque < 450 kNm (331903 lb ft)
[3] Bidirectional drive or undirectional drive with nominal torque > 450 kNm (331903 lb ft)

Table 22: Material ID Coupling adapter for CBm 3000 to 6000 motors

Motor type / shaft diameter	Material ID Unidirectional drive	Material ID Bidirectional drive
CBm 3000 Ø 360	R939067581	R939067581
CBm 3000-4000 Ø 460	R939056668	R939056674
CBm 5000-6000	R939056676	R939056676

Table 23: To order mounting kit

Motor type	Mounting kit	
	Material ID	Item number
CBm 2000	R939055413	078 2315-801
CBm 3000	R939055509	078 2315-802
CBm 4000	R939055497	078 2315-803
CBm 5000	R939055505	078 2315-804
CBm 6000	R939055506	078 2315-805

10.2.1 Dimensions motor with coupling adapter.

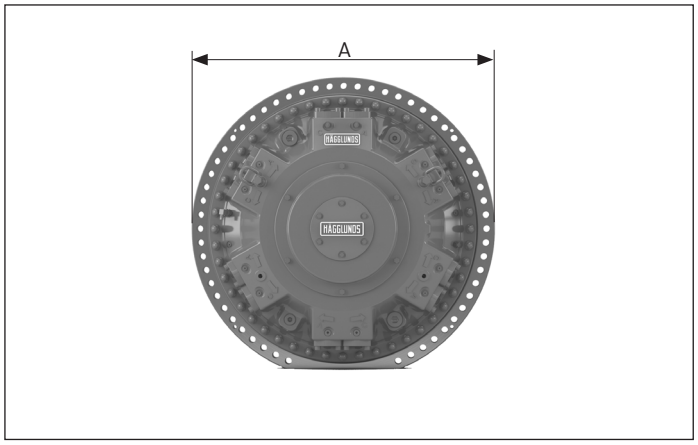

Fig. 90: CBm

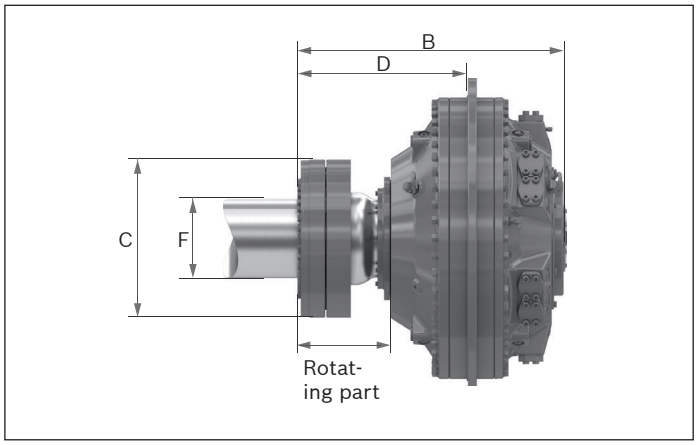

Fig. 91: CBm 2000

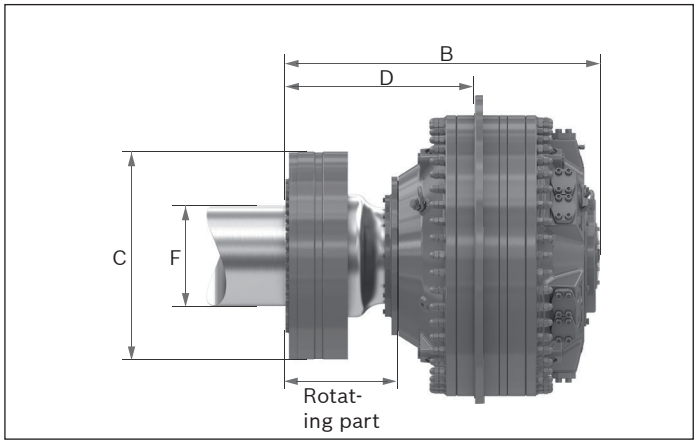

Fig. 92: CBm 3000

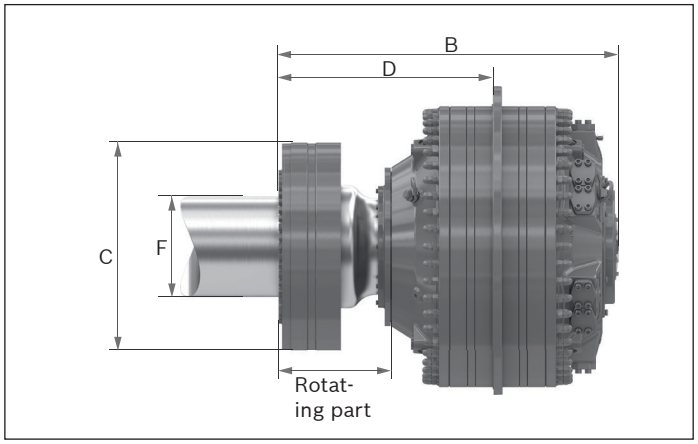

Fig. 93: CBm 4000

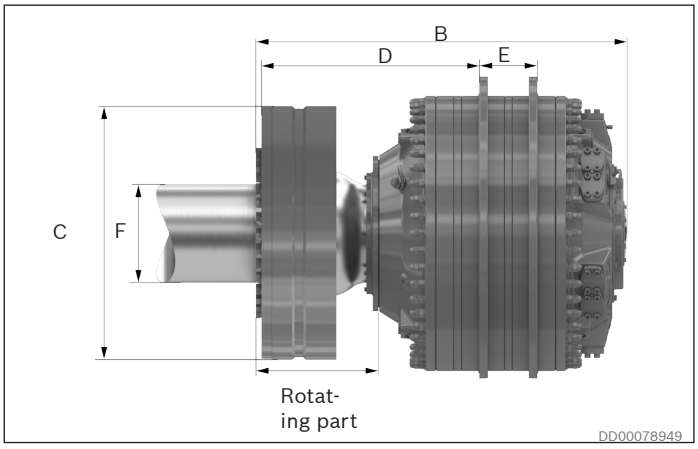

Fig. 94: CBm 5000

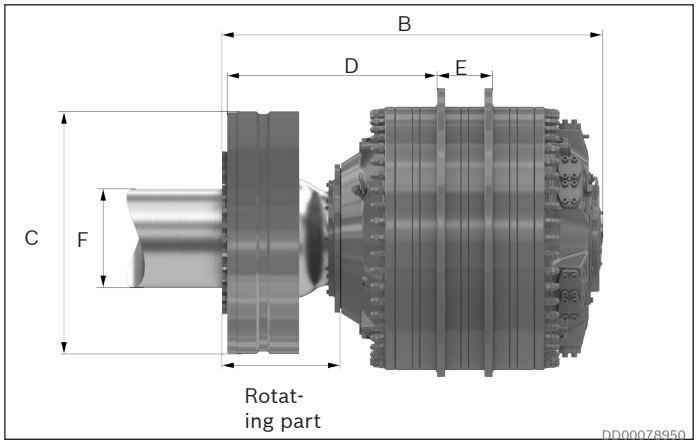

Fig. 95: CBm 6000

Table 24: Dimensions motor with coupling adapter.

Motor	A		B		C		D		E		F		Weight	
	mm	in	mm	in	mm	in	mm	in	mm	in	mm	in	kg	lb
CBm 2000	1 460	57.48	1 211	47.68	720	28.35	773	30.43	-		360	14.17	4 850	10 692
CBm 3000	1 460	57.48	1 419	55.87	950	37.40	863	33.98	-		460	18.11	6 600	14 551
CBm 4000	1 460	57.48	1 537	60.51	950	37.40	981	38.62	-		460	18.11	7 450	16 425
CBm 5000	1 460	57.48	1 739	68.46	1 180	46.46	1 030	40.55	270	10.63	480	18.90	9 700	21 385
CBm 6000	1 460	57.48	1 857	73.11	1 180	46.46	1 030	40.55	270	10.63	480	18.90	10 500	23 149

10.2.2 Vertical mounting

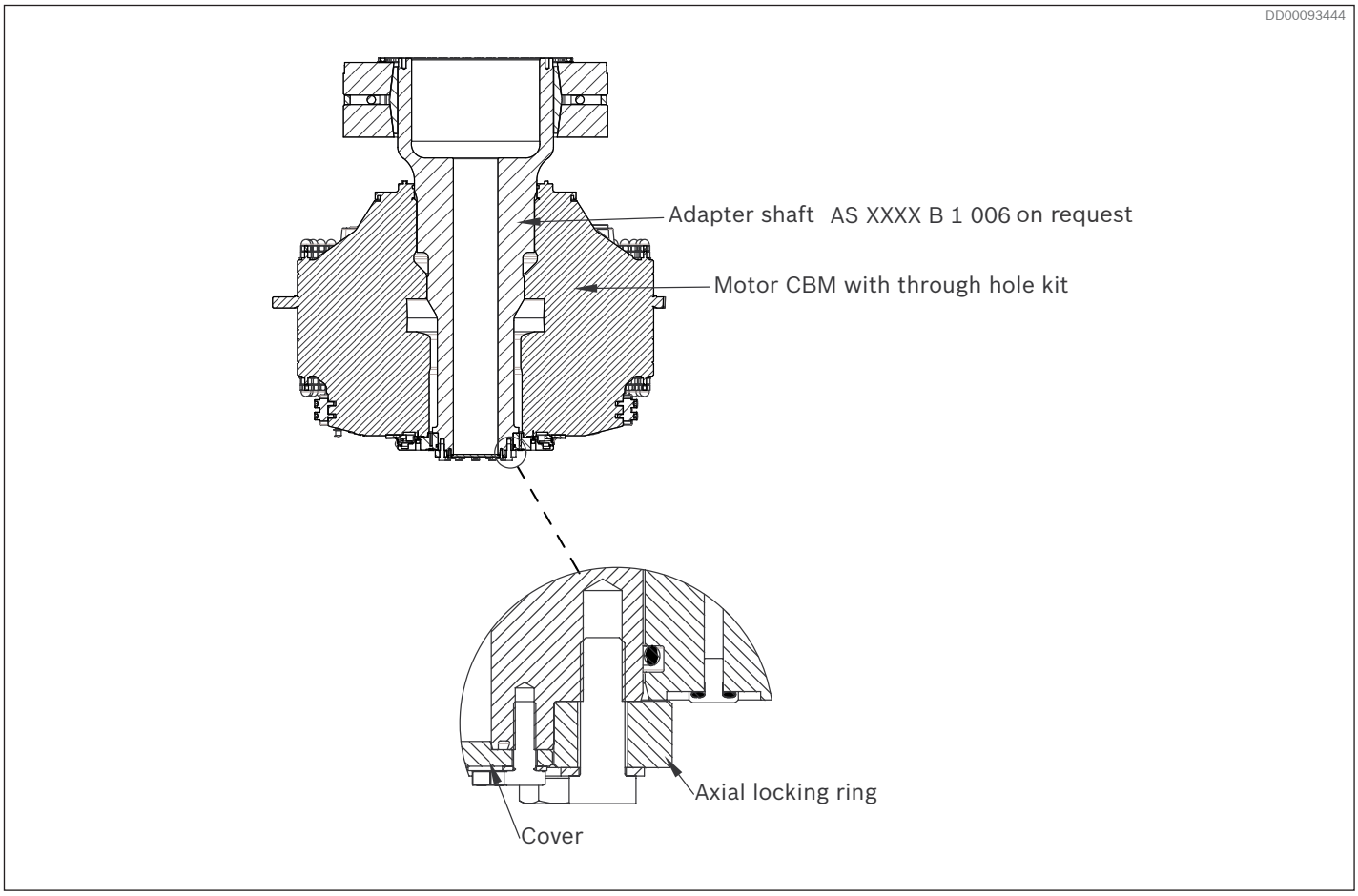

Fig. 96: Example of safe vertical application

10.3 Hägglunds tandem motors

A Tandem motor consists of 3 major units, Front motor + Tandem kit TBM xx + Rear motor. On the stamping sign on the Tandem kit, the max pressure and the total weight for the complete unit are declared. Note that the complete Ordering code for a Tandem motor, contains of 3 individual Ordering codes (3 parts).

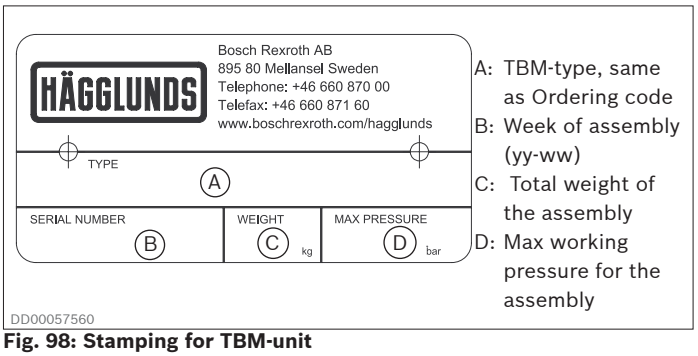

Fig. 98: Stamping for TBM-unit

Dimensions drawings:
CBm 2000 + TBM 40 +CBP 400: See chapter *12: Related documents*.

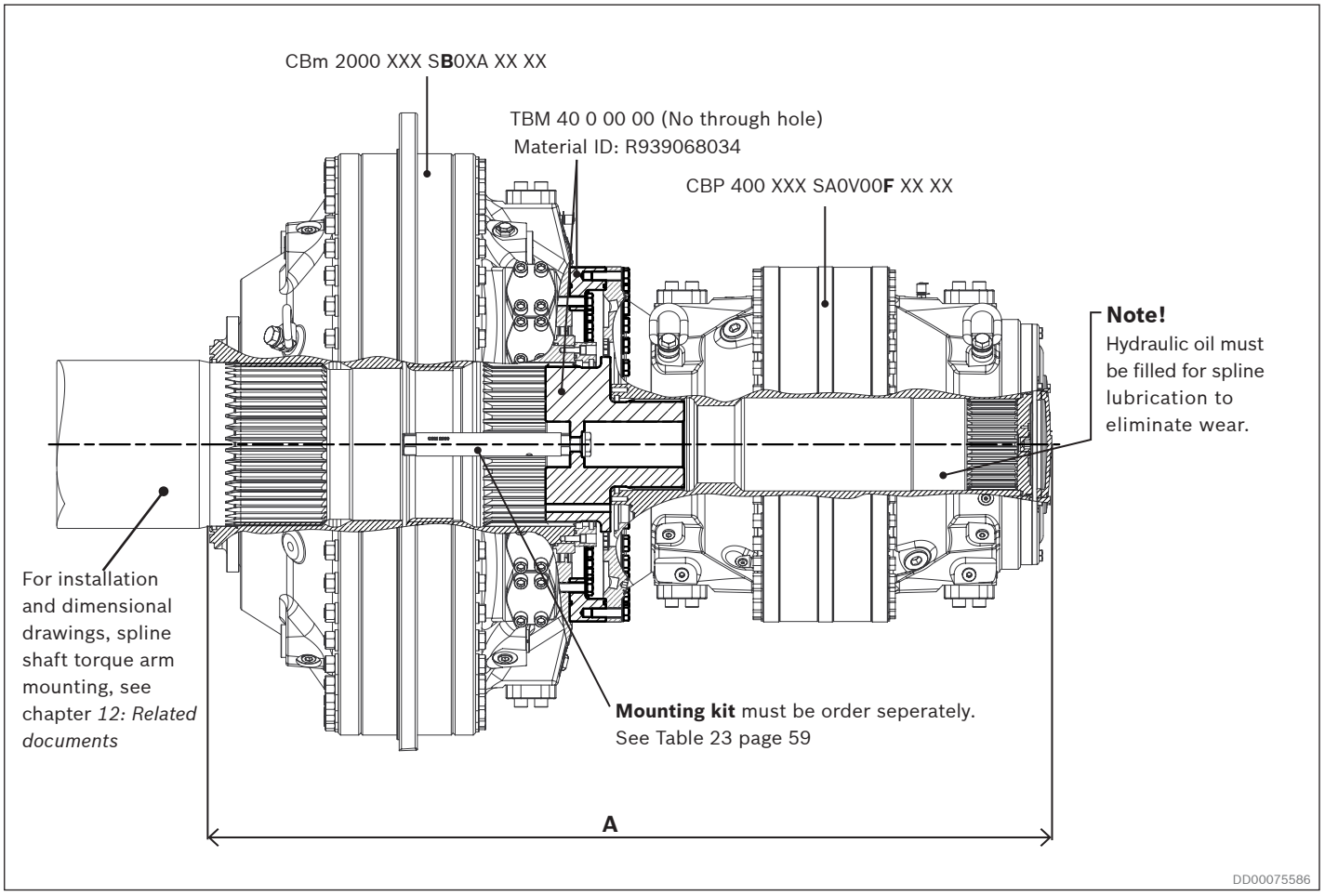

Fig. 97: Example for torque arm mounting, CBm 2000 XXXX SB0X0A XX XX + TBM 40 0 00 00 + CBP 400 XXX SA0V00F XX XX + Mounting kit R939055413

Tandem motor	Max. pressure		Total weight		A Length		Max. torque to driven shaft	
	bar	psi	kg	lb	mm	in	Nm	lbf•ft
CBm 2000 + TBM 40 +CBP 400	350	5 076	6 505	14 344	1 845	72,6	840 000	619 554
CBm 3000 + TBM 40 +CBP 400			7 437	16 399	1 963	77,3	1 190 000	877 702
CBm 4000 + TBM 40 +CBP 400			8 320	18 346	2 081	81,9	1 540 000	1 135 850
CBm 5000 + TBM 40 +CBP 400			9 140	20 154	2 199	86,6	1 890 000	1 393 997
CBm 6000 + TBM 40 +CBP 400			10 005	22 061	2 317	91,2	2 240 000	1 652 145

10.4 Multi disc parking brake

Hägglunds BICA

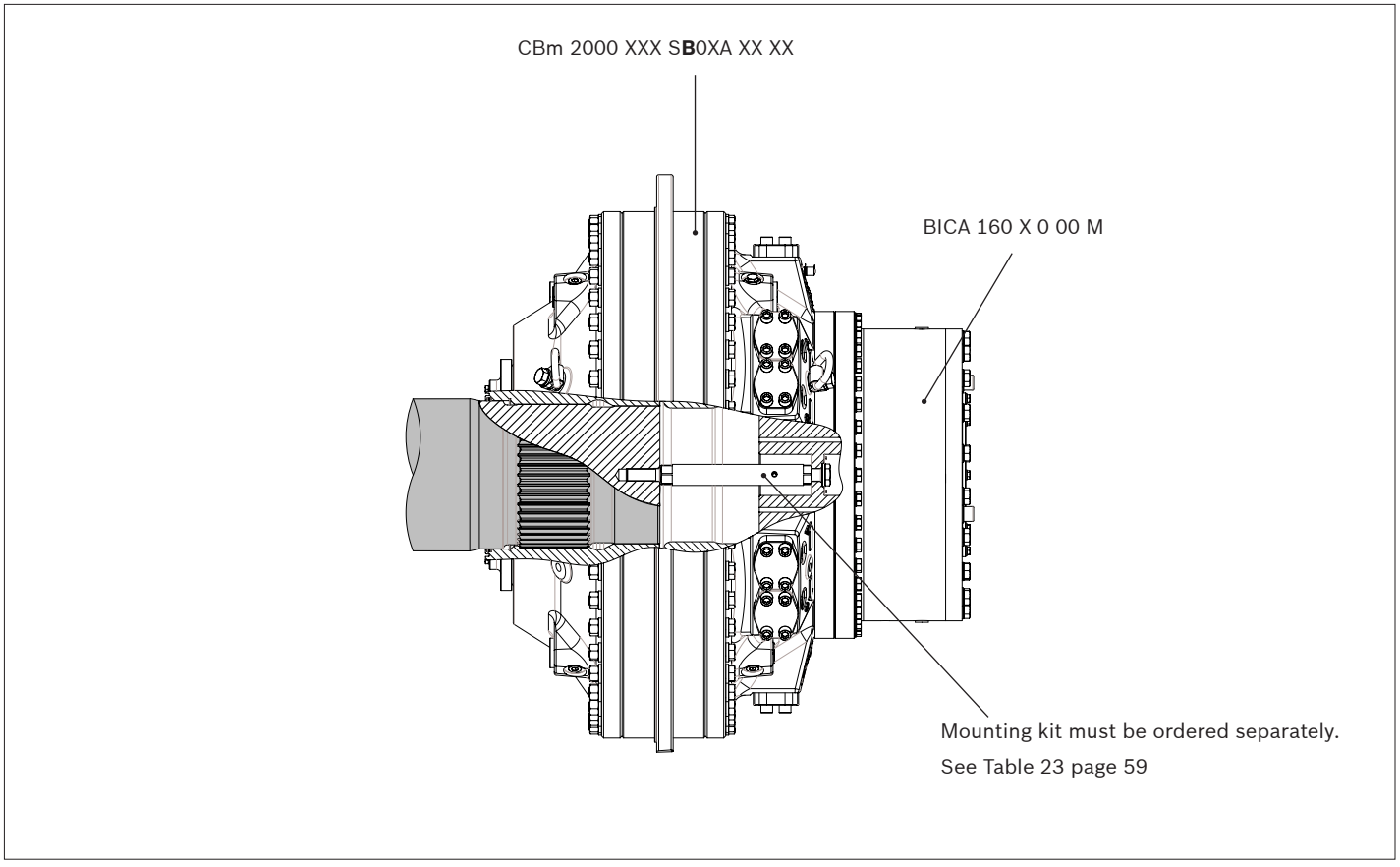

Fig. 99: Example of CBm with mounted BICA 160

For technical data, see document nr: **RE 15366**

Features

- Robust, industrial design
- Possibility for inductive position sensor
- Braking torque range between 90 – 160 kNm
- Manual emergency release
- Version for explosive environment (ATEX) available as option

Description

Hägglunds BICA brake is of multi disc type with a rotating disc-centre (brake discs) and a stationary housing (steel discs). It is a dry brake which means discs are running in dry condition (whithout oil).

10.5 Speed sensor

10.5.1 Hägglunds CBm with SPDC

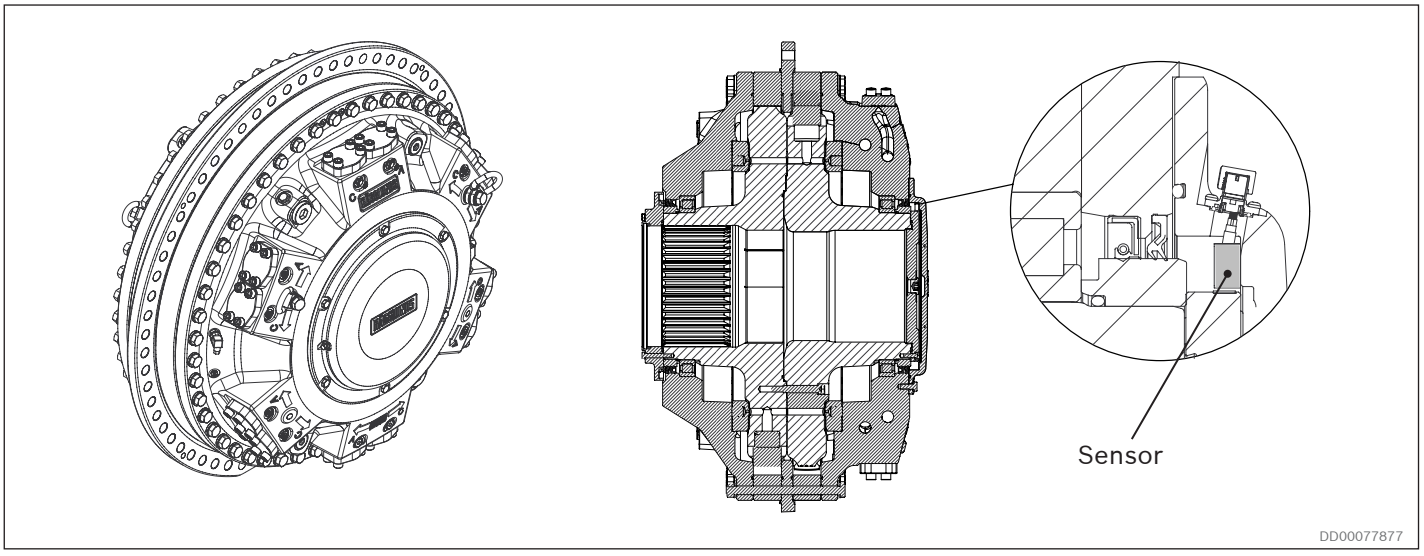

Fig. 100: No through hole

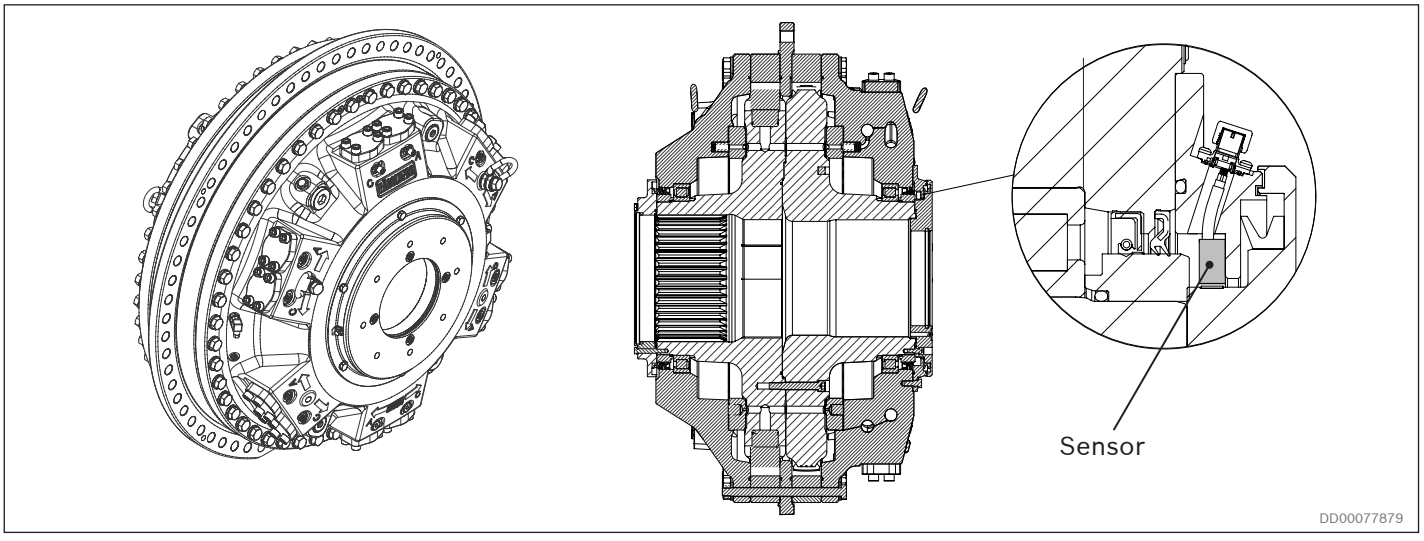

Fig. 101: With through hole

For technical data, see document nr: **RE 15350**

Features

- Slim design fully integrated in motors.
- Non-contact, wear free sensing system
- Possibility to read directions of rotation from sensor
- 4544 pulses per revolution for good speed control possibility
- Protection class IP67

Description

Speed sensing unit, Hägglunds SPDC, is a digital incremental encoder using magnetic sensing technology.

The sensor generates two square wave signals with 90° phase shift for detection of speed and direction of rotation.

10.5.2 Explosion proof speed sensor SPDB 2

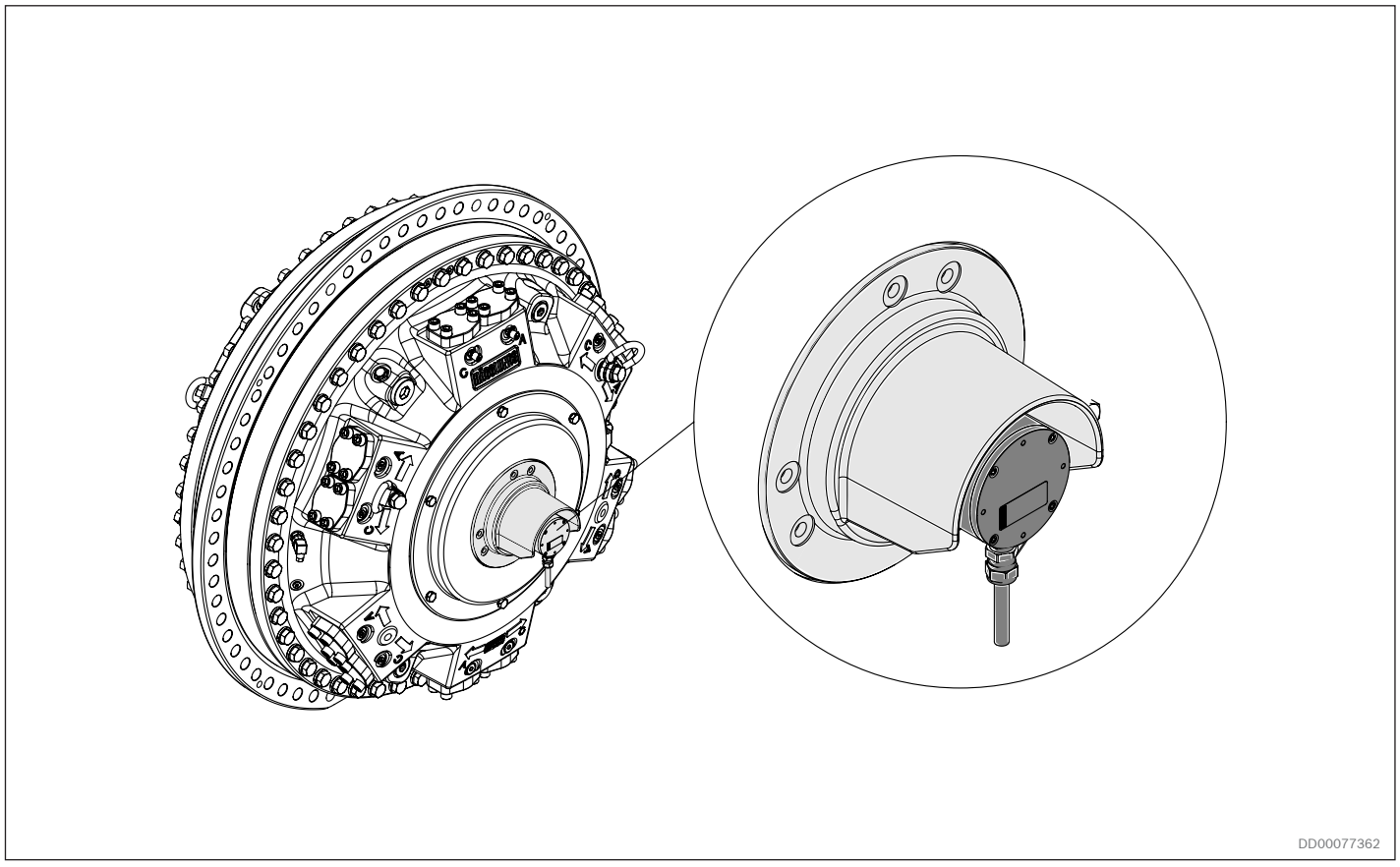

Fig. 102: SPDB 2

For technical data, see document nr: **RE 15352**

Features

- ATEX/IECEx approved
- 1000 and 3600 pulses per revolution for good speed control possibility.
- Possibility to read directions of rotation from sensor
- Sensor is equipped with zero pulse
- Protection class IP65
- Optional cable set with juction box to simplify connection R939003770

Description

Digital incremental hollow shaft sensor with torque arm mounting.

Recommendations:

1000 pulses for speed 6 rpm and above.
3600 pulses for speed below 6 rpm.

10.5.3 Inductive speed sensor SPDE with through hole unit.

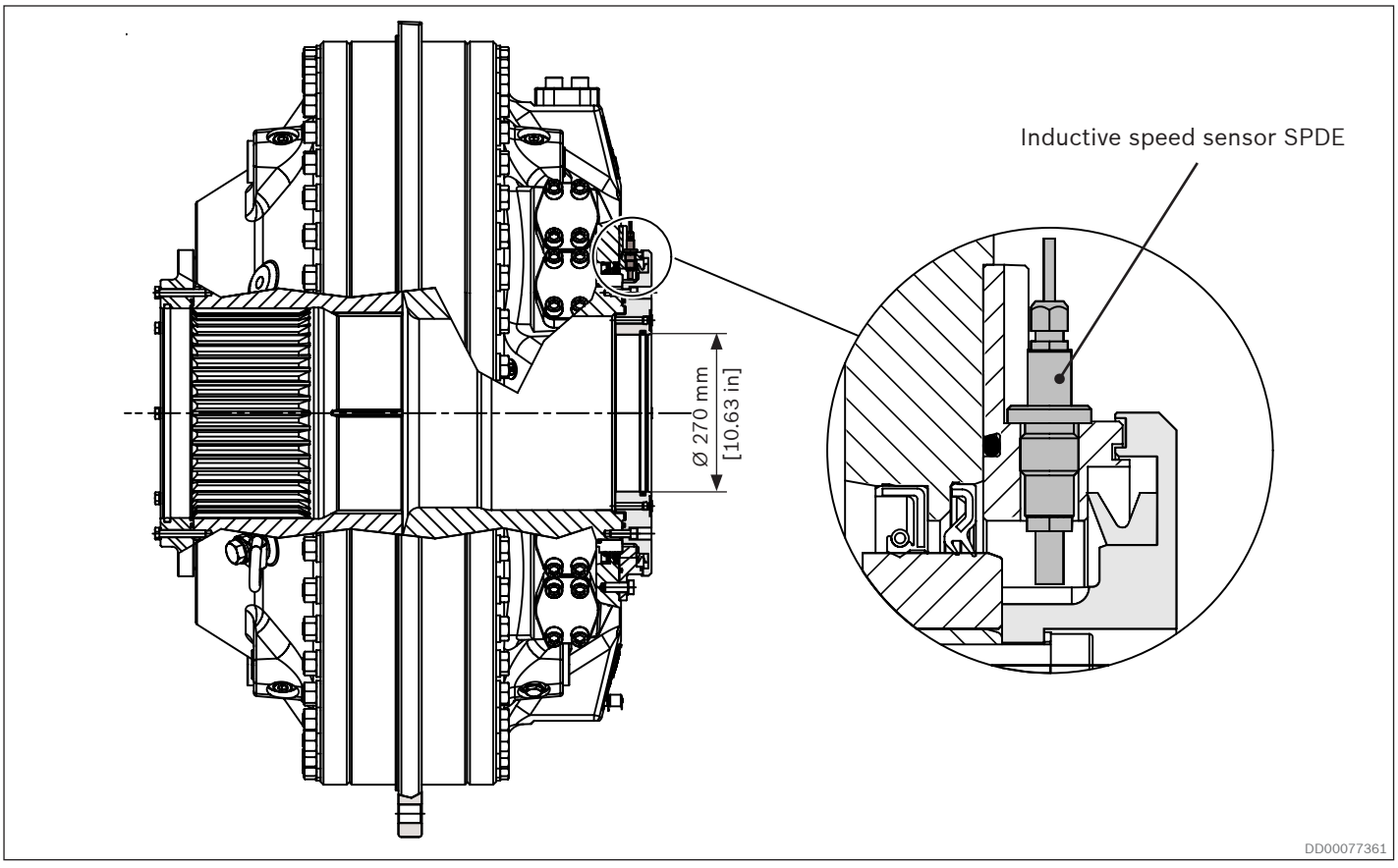

Fig. 103: Inductive speed sensor SPDE with trough hole unit

For technical data, see document nr: **RE 15351**

Features

- Non-contact, wear free system
- Robust design
- ATEX/IECEx -version available
- Through hole version available

Description

Two types of sensors are available.

- The standard type has a PNP output for direct driving of load or digital input.
- The ATEX/IECEx type (explosion proof) needs an isolation amplifier outside explosive area.

The sensor is mainly intended for speed indication. Direction of rotation cannot be indicated.

Mounting is done by replacing a plug on the motor with the sensor and tighten to 35 Nm.

To order:

	Material ID	Item Number
Standard type	R939002764	078 0238-802
ATEX/IECEx type	R393054489	078 0271-801

10.6 Valves

10.6.1 Cross-over valves, COCB 1000-1, -3

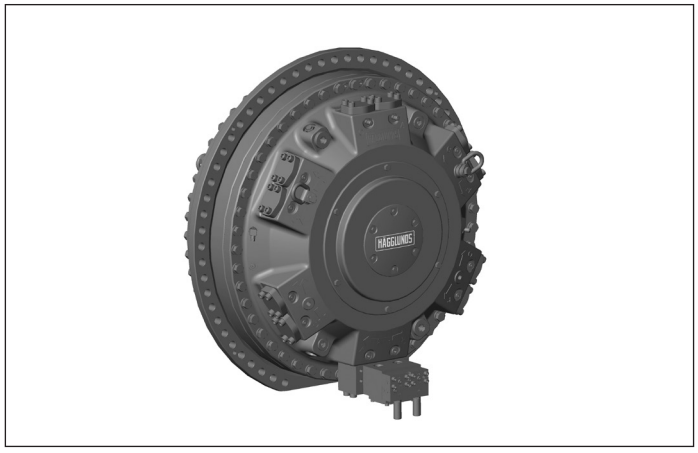

For technical data, see document nr: **RE 15376**

Features

- Compact and robust design
- Mounted directly on Hägglunds motors
- Protect the motor from high pressure peaks
- Provides cavitation protection
- Oil exchange for closed loop system

The valve COCB is designed for Hägglunds motors and provides cross-line relief at pressure shocks and cavitation protection. The relief valves have a standard setting of 350 bar (5076 psi) but can be delivered with preset pressure levels down to 280 bar (4061 psi) in steps of 10 bar (145 psi). Pressure setting is made without charge pressure. The charge pressure relief valve (COCB 1000-3) has a standard setting of 15 bar (218 psi) but is adjustable down to 3 bar (44 psi).

10.6.2 Counter balance valve, VCBCA 1000.

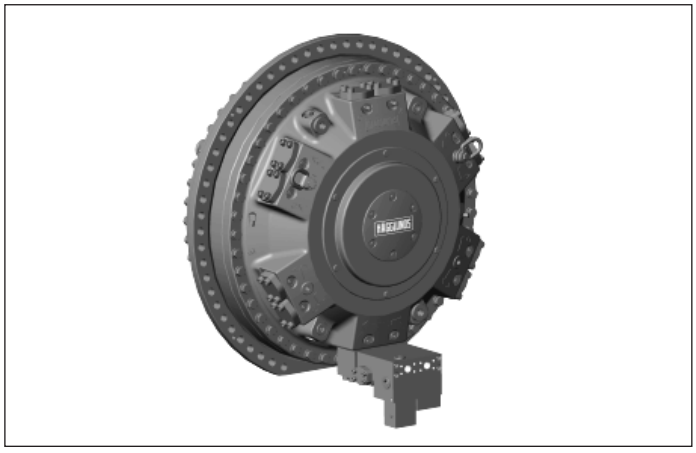

For technical data, see document nr: **RE 15379**

Features

- Compact and robust design
- Mounted directly on Hägglunds motors
- Counter balance function with low pilot pressure
- Pilot pressure independent of load pressure

The VCBCA valve is designed for Hägglunds motors and provides counter balance functions on the motor high pressure line and straight through connection on the motor low pressure line. The maximum operating pressure is 350 bar (5076 psi) and maximum flow 1000 l/min (264 gpm).

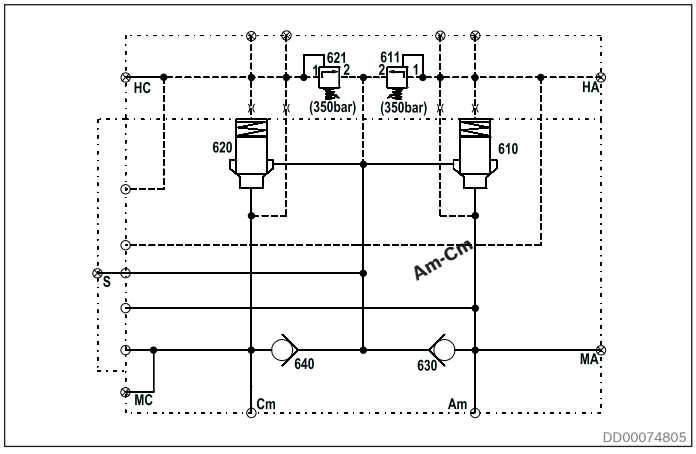

Fig. 104: Hydraulic circuit COCB 1000 1

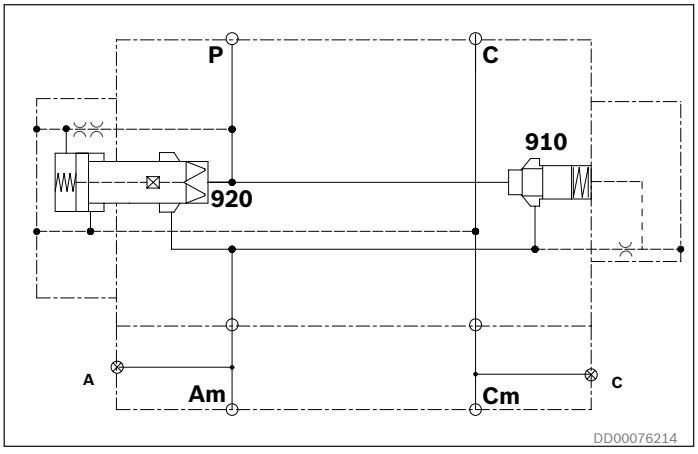

Fig. 105: Hydraulic circuit VCBCA 1000 00 00

10.6.3 Free circulation valve with freewheeling, VFCCA 1000

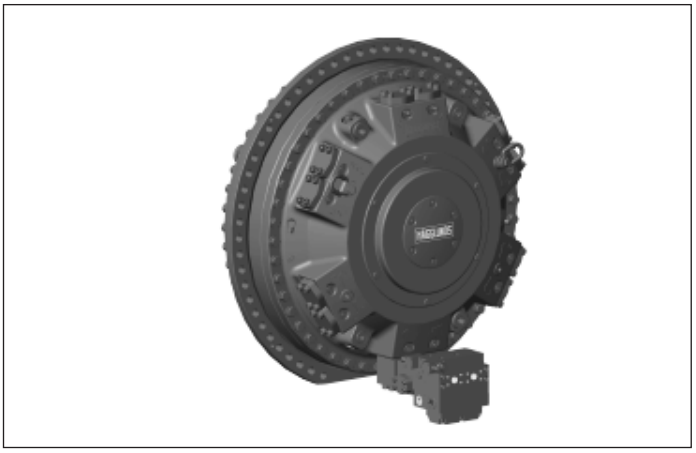

For technical data, see document nr: **RE 15381**

Features

- Compact and robust design
- Mounted directly on Hägglunds motors
- Free circulation function with minimal pressure drop
- Free circulation shift allowed up to 40 rpm
- Freewheeling function
- Shifting from drive operation into freewheeling allowed up to 10 rpm

The VFCCCA valve is designed for Hägglunds motors and provides free circulation or freewheeling functions.
The maximum operating pressure is 350 bar (5076 psi) and maximum flow 1000 l/min (264 gpm).

The valve is available in two configurations:
VFCCA 1000 H Free circulation valve Hydraulic operated
VFCCA 1000 E Free circulation valve Electric operated 24VDC

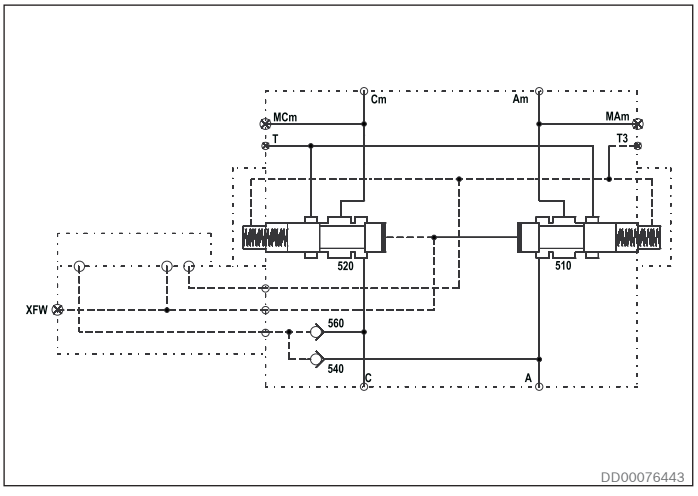

Fig. 106: Hydraulic circuit VFCCA 1000 H

10.6.4 Four-way valve, V4WCA 1000

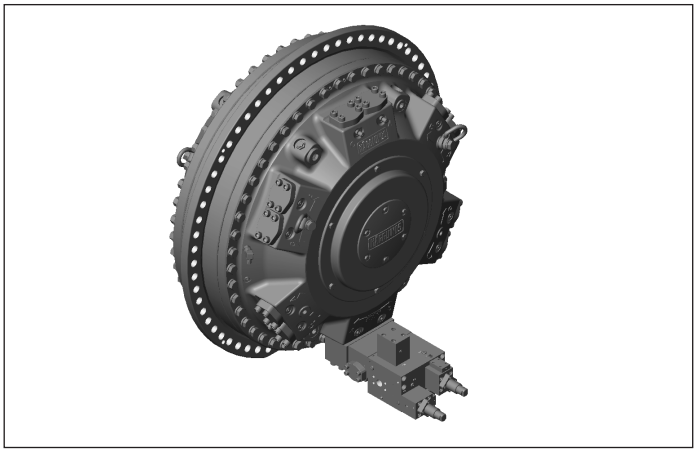

For technical data, see document nr: **RE 15382**

Features

- Compact and robust design
- Mounted directly on Hägglunds motors
- Four way directional and flow control of motor
- Proportionally controlled flow of the motor
- Counter balance function on motor pressure line

The V4WCA valve is designed for Hägglunds motors and provides four way directional and flow control of the motor. The flow is controlled proportional by external pilot pressure applied to ports X1 and X2. The valve includes a counter balance function on the motor pressure line. Maximum operating pressure is 350 bar (5076 psi) and maximum flow 1000 l/min (264 gpm).

The valve is available in one configuration:
V4WCA-1000 including adapter

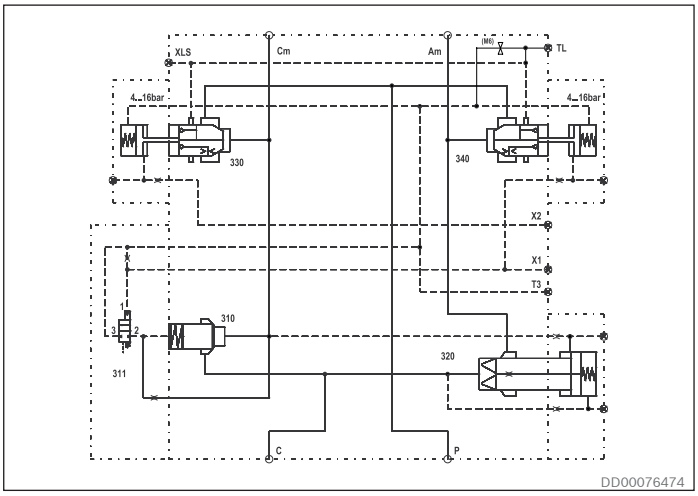

Fig. 107: Hydraulic circuit V4WCA 1000

10.6.5 Hydraulic quick stop valve, VQCB 800

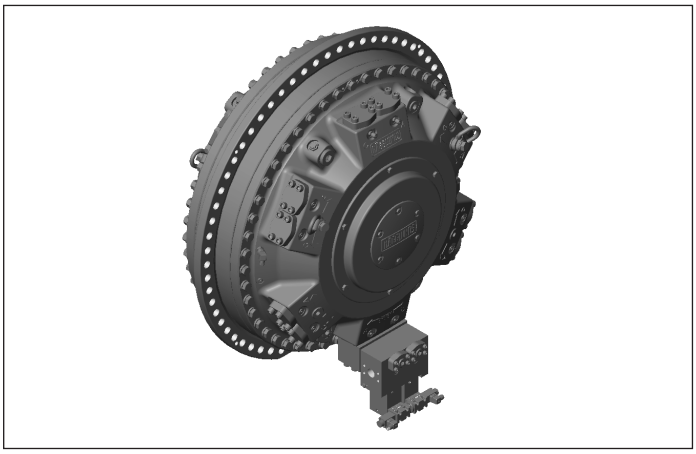

For technical data, see document nr: **RE 15375**

Features

- Compact and robust design
- Mounted directly on Hägglunds motors
- Fast response time

The VQCB 800 valve is designed for Hägglunds motors and provides quick stop for a roll mill rolls without stopping the electric motor and without any need of mechanical brake. A very short braking time is possible due to the small moment of inertia and quick response from hydraulic valve. Maximum operating pressure is 350 bar (5076 psi) and maximum flow 800 l/min (211 gpm).

.

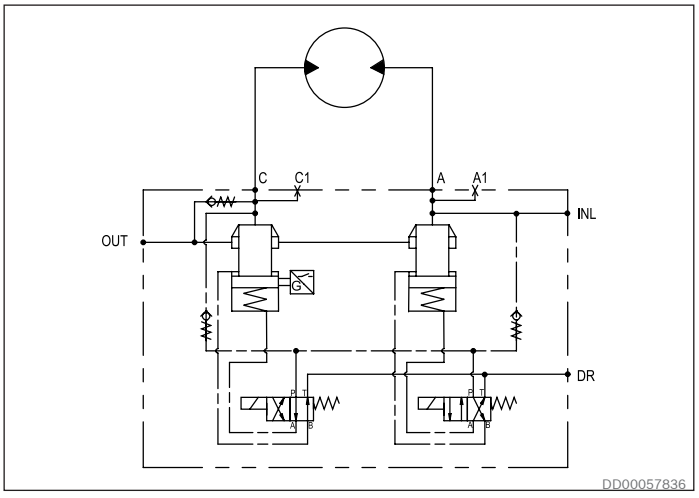

Fig. 108: Hydraulic circuit VQCB 800

10.6.6 Freewheeling valve VFWCB 600

For technical data, see document nr: **RE 15380**

Features

- Compact and robust design
- Multifunctional
- Mounted directly on Hägglunds motors
- Possible for remote control

The VFWCB 600 valve is designed for Hägglunds motors and provides freewheeling of the motor by means of disconnecting the motor from the main lines and connect both motor ports to T which has to be drained to tank. The valve can be mounted directly onto the motor via an adapter and can be used in both open and closed loop applications. Maximum operating pressure is 350 bar (5076 psi) and maximum flow 1000 l(min (264 gpm). Nominal flow is 600 l/min (156 gpm).

The valve is available in three main configurations:

VFWCB 600 E Freewheeling valve electrically operated
VFWCB 600 H Freewheeling valve hydraulically operated
VFWCB 600 M Freewheeling valve manually operated

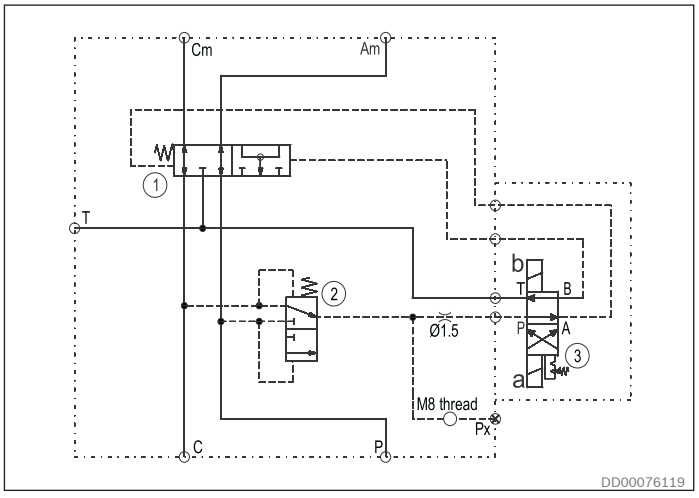

Fig. 109: Hydraulic circuit VFWCB 600

11 Circuit design

11.1 Closed circuit

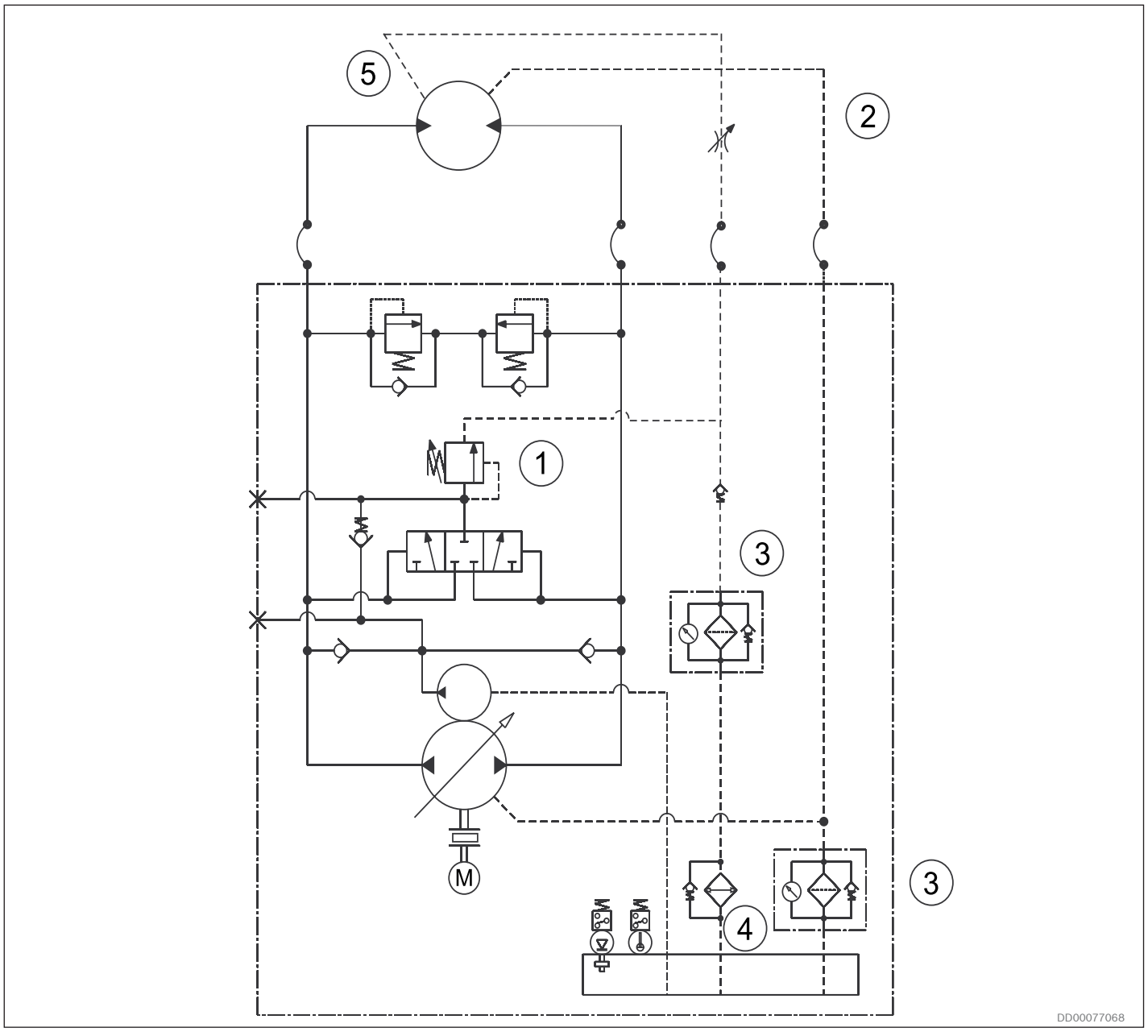

Fig. 110: Closed circuit

Things to consider:

1. Level of charge pressure
2. Case drain flow
3. Filter
4. Cooler
5. Flushing (check valve variant)

11.2 Open circuit

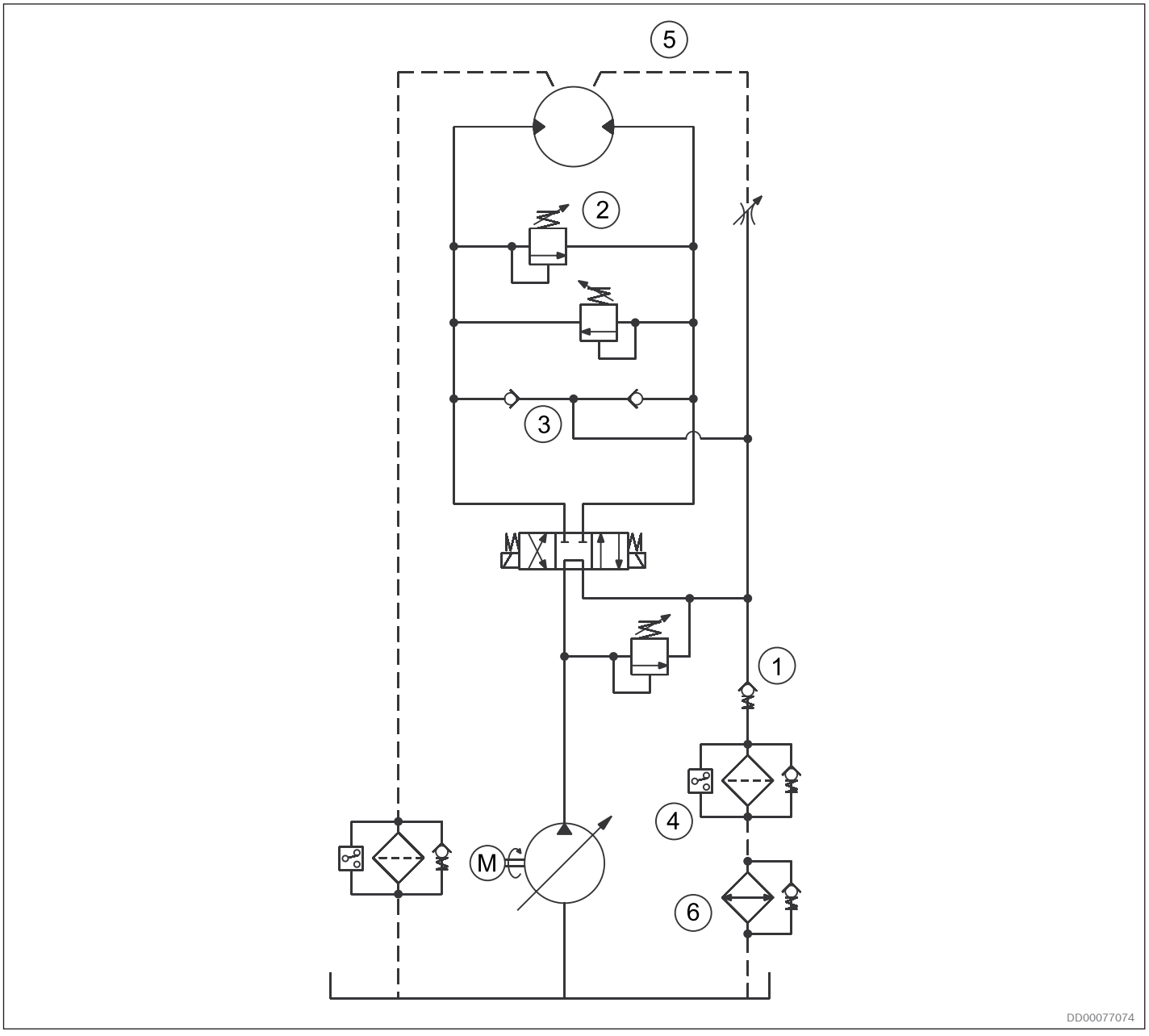

Fig. 111: Open circuit

Things to consider:

1. Counter pressure required minimum 2 bar to ensure recommended charge pressure
2. Cross over relief valves for reduction of pressure spikes
3. Anticavitation valves
4. Return line filter
5. Case flushing
6. Cooler

12 Related documents

	Title	Document no	Document type
🕮	Hydraulic fluid quick reference	RE 15414	Data sheet
🕮	Hägglunds CBm	RE 15300-WA	Installation & maintenance manual
🕮	CBM 2000 with splines	078 2556	Dimension drawing
🕮	CBM 3000 with splines	078 2557	Dimension drawing
🕮	CBM 4000 with splines	078 2558	Dimension drawing
🕮	CBM 5000 with splines	078 2559	Dimension drawing
🕮	CBM 6000 with splines	078 2560	Dimension drawing
🕮	Shaft with splines CBM 2000	078 2432	Dimension drawing
🕮	Shaft with splines CBM 3000-4000	078 2451	Dimension drawing
🕮	Shaft with splines CBM 5000-6000	078 2673	Dimension drawings
🕮	Through hole kit	078 2674	Dimension drawings
🕮	Submerge applications CBM 2000-4000	078 2758	Dimension drawings
🕮	CBM 2000 splines, with coupling adapter	078 2561	Dimension drawings
🕮	CBm 2000 C	078 5304	Dimension drawings
🕮	CBm 2000 E	078 5342	Dimension drawings
🕮	CBM 3000 splines, with coupling adapter	078 2562	Dimension drawings
🕮	CBm 3000 C	078 5343	Dimension drawings
🕮	CBM 4000 splines, with coupling adapter	078 2563	Dimension drawings
🕮	CBM 5000 splines, with coupling adapter	078 2564	Dimension drawings
🕮	CBM 6000 splines, with coupling adapter	078 2565	Dimension drawings
🕮	Tandem CBM 2000 +TBM 40 + CBP 400	078 2676	Dimension drawings
🕮	Torque arms Hägglunds TCA, DTCA, DTCB	RE 15355	Data Sheet
🕮	Rotation speed sensing unit, Hägglunds SPDC	RE 15350	Data Sheet
🕮	Rotation speed sensing unit, Hägglunds SPDB2 EX	RE 15352	Data Sheet
🕮	Rotation speed sensing unit, Hägglunds Inductive through hole	RE 15351	Data Sheet
🕮	Cross-over valve, Hägglunds COCB 500, COCB 1000	RE 15376	Data Sheet
🕮	Counter balance valve, Hägglunds VCBCA 1000	RE 15379	Data Sheet
🕮	Free circulation valve, Hägglunds VFCCA 1000	RE 15381	Data Sheet
🕮	Four-way valve including counter balance on load line, Hägglunds V4WCA 1000	RE 15382	Data Sheet
🕮	Hydraulic quick stop valve, Hägglunds VQCB 800	RE 15375	Data Sheet
🕮	Freewheeling valve, Hägglunds VFWCB 600	RE 15380	Data Sheet
🕮	Valve adapters Hägglunds VA 1000	RE 15383	Data Sheet

Bosch Rexroth AB
895 80 Mellansel, Sweden
Tel: +46 (0) 660 870 00
Fax: +46 (0) 660 871 60
documentation.mll@boschrexroth.se
www.boschrexroth.com

The data specified above only serve to describe the product.
As our products are constantly being further developed, no statements concering a certain condition or suitability for certain application can be derived from our information. The information given does not release the user from the obligation of own judgement and verification. It must be remembered that our products are subject to a natural process of wear and aging.