The Drive & Control Company

Rexroth
Bosch Group

Hägglunds VI

Radial piston hydraulic motor

Installation and maintenance manual
RE 15310-WA/10.2015

Supersedes:
EN 323-23br/2011
English

The data specified above only serve to describe the product. No statements concerning a certain condition or suitability for a certain application can be derived from our information. The information given does not release the user from the obligation of own judgment and verification. It must be remembered that our products are subject to a natural process of wear and aging.

© This document, as well as the data, specifications and other information set forth in it, are the exclusive property of Bosch Rexroth AG. It may not be reproduced or given to third parties without its consent.

Changes in the equipment may occur. We therefore reserve the right to introduce amendments in the manual as we deem necessary without notice or obligations.

This Installation and Maintenance Manual is valid for motor series 44, 64 and 84 manufactured after 95-01-01. For older motors please contact your nearest Bosch Rexroth representative.

The cover shows an example configuration. The product supplied may therefore differ from the figure shown.

The original operating instructions were prepared in English.

Contents

	Preface	**2**
1	**General**	**4**
1.1	Safety precautions	4
1.2	Motor data	5
1.3	Functional description	6
2	**Technical data**	**8**
2.1	Recommended charge pressure	8
2.2	Noise from a complete installation	9
2.3	Choice of hydraulic fluid	10
	Environmentally acceptable fluids	11
3	**Installation**	**12**
3.1	Mounting instruction	12
3.1.1	Common lifting methods	13
3.1.2	Motor – rope drum – shaft adapter	15
3.1.3	Motor – valves	17
3.1.4	Motor – torque arm	18
3.1.5	Motor – front bracket	23
	Mounting of bracket BB-46 and BB-85 on foundation	25
	Mounting of winch on foundation	27
	Brake assembly BA-43 and BA-63	28
	Brake assembly BA-85	34
	Brake cylinder BCI-M for brake assembly BA-43, BA-63 and BA-85	38
	Draining of brake cylinders	40
	Installation of brake assembly BA-43, BA-63 single acting and brake cylinder BCI-M	41
	Installation of brake assembly BA-43, BA-63 double acting and brake cylinder BCI-M	42
	Installation of brake assembly BA-85 single + double acting and brake cylinder BCI-M	44
3.2	Oil connections	47
3.2.1	Oil connections, motor without valve, series 44 and 64	47
3.2.2	Oil connections, motor series 84	48
3.2.3	Oil connections, V46-C	50
3.2.4	Oil connections, V46-O	51
3.3	Reversal of rotation	52
4	**Handling**	**54**
4.1	Instructions for storage	54
4.2	Before commissioning	55
4.3	Commissioning	55
4.4	Periodic maintenance	56
4.4.1	Cleaning and care	59
4.5	Disposing	59
5	**Fault finding**	**60**
6	**Drawings**	**62**
7	**Declaration of incorporation**	**64**

1 General

1.1 Safety precautions

It is of high importance that the Safety precautions are always followed, if you are unsure about something, please do not hesitate to contact your nearest Hägglunds office for advice.

- **Warning signs.** In this manual you will find the following signs which indicate a potential hazard, which can or will cause personal injury or substantial property damage. Depending on the probability of the hazard, and how serious the injury or property damage could be, there are three levels of classification.

Warning sign, signal word	Meaning
⚠ DANGER	Indicates a dangerous situation which may cause death or severe personal injuries if not avoided.
⚠ WARNING	Indicates a dangerous situation which may cause death or severe personal injuries if not avoided.
⚠ CAUTION	Indicates a dangerous situation which may cause minor or medium personal injuries if not avoided.
NOTICE	Damage to property: The product or the environment could be damaged.

- **Application area.** All new and rebuild applications, should always be approved and supervised by Hägglunds personnel.
- **Mounting.** Carefully follow the instructions and be aware of the high weights and forces during lifting.
- **Before starting up.** Before starting up new, rebuild or just worked on applications, all accessories and safety arrangements functions, should be controlled/tested.
- **Periodic maintenance.** Notice the intervals in maintenance chart (4.4) and keep a record.
- **Dismounting.** Carefully follow the instructions and be aware of the high weights and forces during lifting.

1.2 Motor data

Motor type	Full displacement				Max.*** pressure	Displacement shift				Ratio
	Displace-ment	Specific torque**	Rated speed*	Max. Speed		Displace-ment	Specific torque**	Rated speed*	Max. speed	
	V_i	T_s	n	n	p	V_i	T_s	n	n	
44-03300	3 325	53	100	200	320	1 662	26	100	200	1:2
44-04700	4 710	75	100	200	320	2 356	37	100	200	1:2
44-06800	6 790	108	90	170	320	3 393	54	90	170	1:2
44-09200	9 240	147	80	145	320	4 618	74	80	145	1:2
64-11100	11 080	176	70	120	320	5 542	88	70	120	1:2
64-13500	13 599	215	60	110	250	6 750	107	60	110	1:2
64-16300	16 340	260	50	100	250	8 171	130	50	100	1:2
84-14800	14 840	236	55	90	320	–	–	–	–	–
84-17900	17 961	286	55	85	320	–	–	–	–	–
84-21300	21 375	340	55	80	320	–	–	–	–	–
84-25100	25 090	399	55	75	320	–	–	–	–	–
84-38000	38 000	605	40	60	250	–	–	–	–	–
84-22300	22 300	355	55	55	320	11 150	177	60	85	1:2
84-33800	33 780	538	35	35	250	16 889	269	50	70	1:2
84-25100	25 090	399	40	55	250	8 362	133	45	75	1:3
84-38000	38 000	605	25	35	250	12 667	202	35	60	1:3
84-25100	25 090	399	40	55	250	16 724	266	45	75	2:3

* Related to a required charge pressure of 12 bar (175 psi) for motors in braking mode. Special considerations regarding charge pressure, cooling and choice of hydraulic system for speeds above rated.

** Theoretical value

*** The motors are designed according to DNV-rules. Test pressure 70 bar (1000 psi) above max. pressure. Peak/transient pressure 70 bar (1000 psi) above max. pressure is allowed to occur 10000 times.

Quantity	Symbol	Metric	US
Displacement	V_i =	cm^3/rev	in^3/rev
Specific torque	T_s =	Nm/bar	lbf·ft/1000 psi
Speed	n =	rpm	rpm
Pressure	p =	bar	psi

Motor type	Full displacement				Max.*** pressure	Displacement shift				Ratio
	Displace-ment	Specific torque**	Rated speed*	Max. Speed		Displace-ment	Specific torque**	Rated speed*	Max. speed	
	V_i	T_s	n	n	p	V_i	T_s	n	n	
44-03300	203	2 695	100	200	4 650	101	1 347	100	200	1:2
44-04700	287	3 814	100	200	4 650	144	1 907	100	200	1:2
44-06800	414	5 492	90	170	4 650	207	2 746	90	170	1:2
44-09200	564	7 475	80	145	4 650	282	3 738	80	145	1:2
64-11100	676	8 971	70	120	4 650	338	4 485	70	120	1:2
64-13500	823	10 935	60	110	3 600	411	5 467	60	110	1:2
64-16300	997	13 227	50	100	3 600	499	6 613	50	100	1:2
84-14800	906	12 017	55	90	4 650	–	–	–	–	–
84-17900	1 096	14 546	55	85	4 650	–	–	–	–	–
84-21300	1 304	17 292	55	80	4 650	–	–	–	–	–
84-25100	1 531	20 306	55	75	4 650	–	–	–	–	–
84-38000	2 320	30 756	40	60	3 600	–	–	–	–	–
84-22300	1 361	18 048	55	55	4 650	680	9 024	60	85	1:2
84-33800	2 064	27 339	35	35	3 600	1 031	13 669	50	70	1:2
84-25100	1 531	20 306	40	55	3 600	510	6 769	45	75	1:3
84-38000	2 319	30 756	25	35	3 600	773	10 252	35	60	1:3
84-25100	1 531	20 306	40	55	3 600	1 021	13 537	45	75	2:3
84-38000	2 319	30 756	25	35	3 600	1 546	20 504	35	60	2:3

* Related to a required charge pressure of 12 bar (175 psi) for motors in braking mode. Special considerations regarding charge pressure, cooling and choice of hydraulic system for speeds above rated.

** Theoretical value

*** The motors are designed according to DNV-rules. Test pressure 70 bar (1000 psi) above max. pressure. Peak/transient pressure 70 bar (1000 psi) above max. pressure is allowed to occur 10000 times.

Quantity	Symbol	Metric	US
Displacement	V_i =	cm^3/rev	in^3/rev
Specific torque	T_s =	Nm/bar	lbf·ft/1000 psi
Speed	n =	rpm	rpm
Pressure	p =	bar	psi

1.3 Functional description

The Hägglunds VI motors are of radial piston type with rotating case. The case is supported on the stationary cylinder block (5) by two main bearings. An even number of radially positioned pistons (3) work in cylinder bores in the cylinder block, which also houses the inlet and outlet ports (A and C). Each piston is coupled by a piston rod (2) to a cross head pin (6) upon which four cam rollers (7) are mounted. The two inner cam rollers press against the cam ring (8) while the two outer rollers work within their respective guide plates (1). The cam ring is anchored to the rotating case. The distributor (4) directs the input oil to the pistons during their work strokes and returns the exhausted oil back to the tank. The distributor is coupled to the rotating case via a safety coupling (9).

The motor can be connected to a driven machine via two mounting surfaces on the rear end of the motor.

The symmetrical design of the motor has made it possible to construct it as a 2-speed motor. This means that two different speeds are obtained for a given flow.

The simplest way of performing displacement change over is by connecting a special valve, known as a 2-speed valve, direct to the connecting flange on the cylinder block.

The motor is designed so that pressure pulsations in the motor case are avoided. This has the advantage that impurities are not sucked into the case.

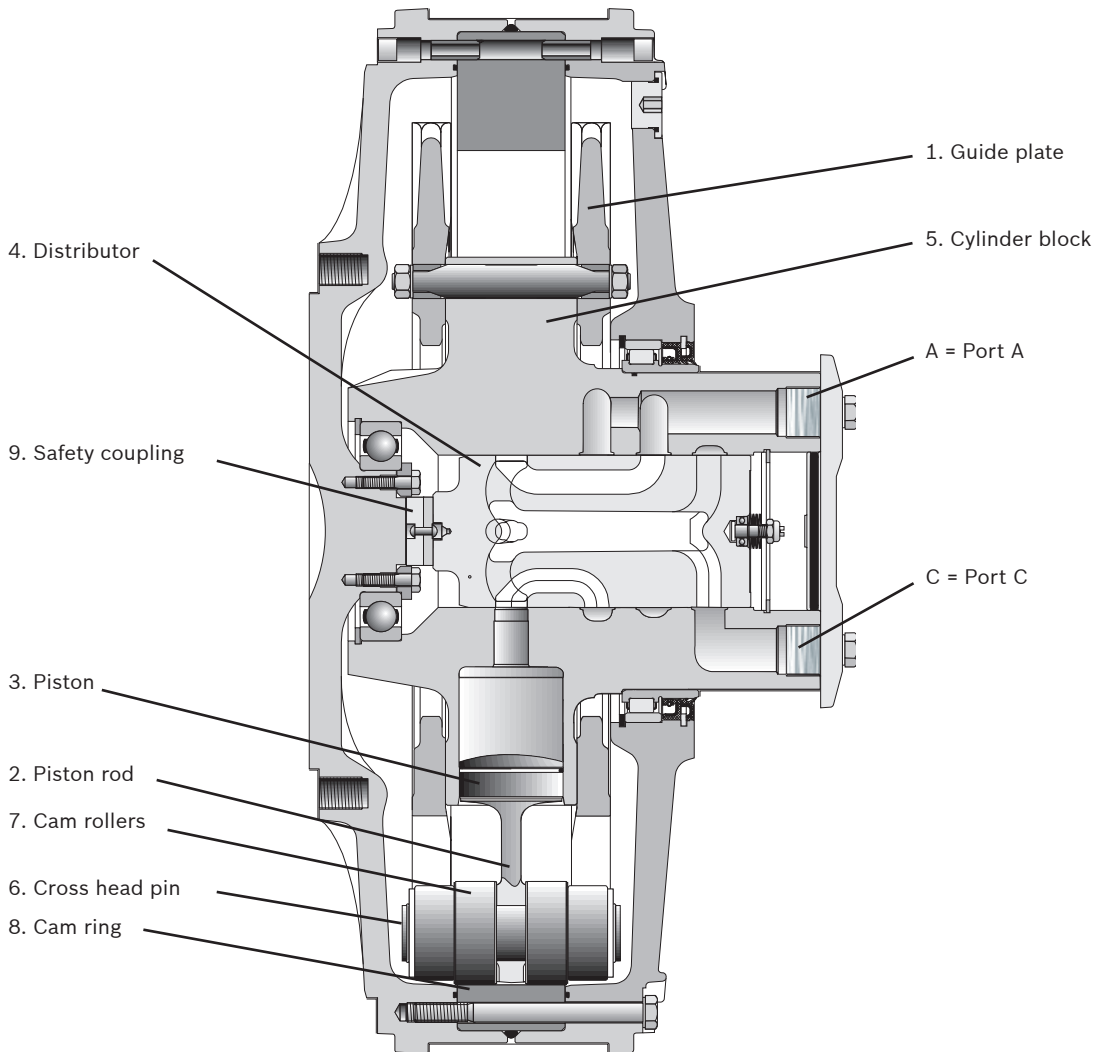

Fig. 1: The Hägglunds VI motor

2 Technical data

2.1 Recommended charge pressure

The motor must be connected to the hydraulic system so that it receives sufficient charge pressure at the low pressure connection. This applies to all types of installations.

⚠ WARNING

In hanging load applications, charge pressure at motors connection must be according to graph below under all conditions.

Two alternatives of motor duty must be considered:

1. The graph is for motors, used in half displacement connection (“high speed range”) or operating as a braking unit (during hydrostatic braking).
2. When motors are operating exclusively in driving mode, the charge pressure is 30% of the graph values but may not be below 2 bar/29 psi.

44-, 64- and 84-series:
Max case pressure is 3 bar/43.5 psi (for 1% of the operation time evenly divided, pressure peaks of max 5 seconds up to 8 bar/116 psi are allowed).
The max permitted case pressure at standstill is 8 bar/116 psi.

For motors fitted with silicon-rubber seals these pressures must be reduced by 50%.

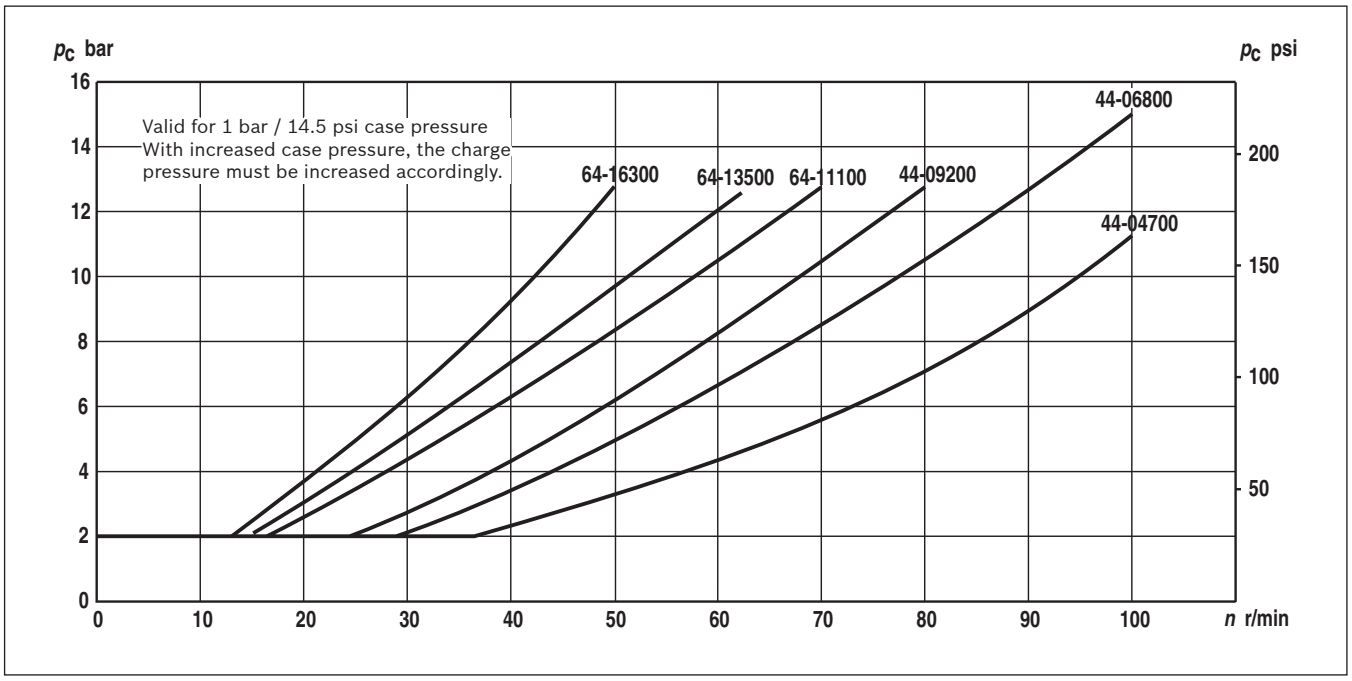

Fig. 2: Charge pressure

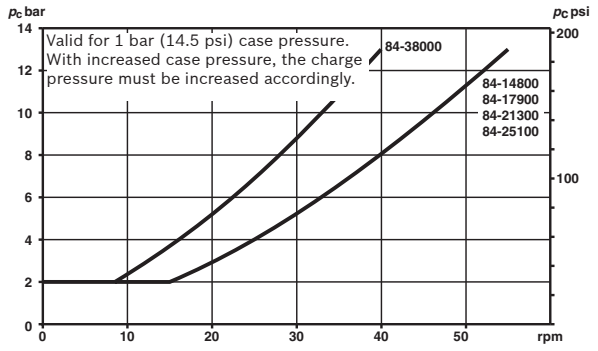

Fig. 3: Valid for A- and B-type motors without 2-speed valve

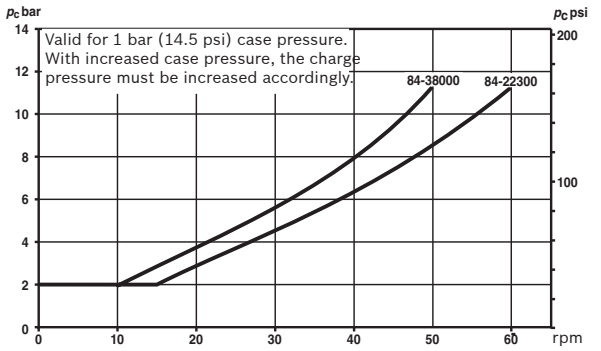

Fig. 4: Valid for A- and B-type motors with 2-speed valve

2.2 Noise from a complete installation

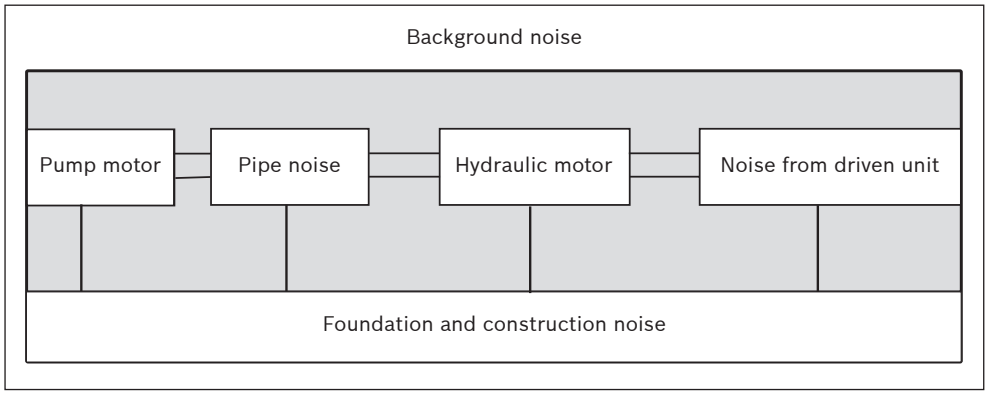

Remarks:

Background noise

The background noise can not normally be influenced but is usually known or easy to measure.

Pump unit

The pump unit is a known noise source.

Pipe noise
The pipe noise is probably the source of the majority of mistakes in installations: all pipe clamps should be of vibration insulating type secured to concrete ceiling, wall or floor. Securing to non-rigid metal structures or structures likely to give resonance must be avoided.

Hydraulic motor
The hydraulic motor is a known noise source. (Tables of sound data – see subsection 4.9 in the Engineering Manual).

Driven unit
The driven unit is an unknown noise source (for us) but can through certain information probably be obtained from the supplier. When securing the torque arm of a hydraulic motor to foundation of the casing of a driven machine, it is highly important to study the construction of the foundation or casing. This may well be the most important factor to consider, since many structures may give rise to resonance with severe noise problems as a result.

2.3 Choice of hydraulic fluid

The Hägglunds hydraulic motors are primarily designed to operate on conventional petroleum based hydraulic oils. The hydraulic oil can be chosen in consultation with the oil supplier of your local sales office, bearing the following requirements in mind:

General
The oil shall have FZG (90) fail stage minimum 11 described in IP 334 (DIN 51354). The oil must also contain inhibitors to prevent oxidation, corrosion and foaming. The viscosity of mineral oil is highly dependant of the temperature. The final choice of oil must depend on the operating temperature that can be expected or that has been established in the system and not in the hydraulic tank. High temperatures in the system greatly reduce the service life of oil and rubber seals, as well as resulting in low viscosity, which in turn provides poor lubrication.
Content of water shall be less than 0.1%. In Industrial applications, the content of water shall be less than 0.05%.

Recommended viscosity at operating temperature 40-150 cst/187-720 ssu.

Temperature limits	
Normal operating temperature should be less than +50 °C (122 °F)	
Nitrile seals (std motor) Viton seals	-35° C to +70° C -20° C to +100° C
Nitrile seals (std motor) Viton seals	-31° F to +158° F -4° F to +212° F

Viscosity limits	
Viscosity index	=100 recommended =150* for operation with large temperature difference
Min. permitted in continuous duty Min. permitted in intermittent duty Max. permitted	40 cSt/187 SSU 20 cSt/98 SSU** 10000 cSt/48000 SSU

* Many hydraulic fluids with VI-improvers are subject to temporary and permanent reductions of the viscosity.

**** Low viscosity gives reduced service life for the motors and reduction of max. allowed power for "Hägglunds VI".**

Fire resistant fluids

Operating with fire resistant fluids

The following fluids are tested for Hägglunds motors: (ISO/DP 6071)

Fluid	Approved	Seals	Internal paint
HFA: Oil (3-5%) in water emulsion	No	–	–
HFB: Inverted emulsion 40-45% water in oil	Yes	Nitrile (std motor)	Not painted*
HFC: Water-glycol	Yes	Nitrile (std motor)	Not painted*
HFD synthetic fluids			
HFD:R – Phosphate esters	Yes	Viton	Not painted*
HFD:S – Chlorinated hydrocarbons	Yes	Viton	Not painted*
HFD:T – Mixture of the above	Yes	Viton	Not painted*
HFD:U – Other compositions	Yes	Viton	Not painted*

* Must be specified in the order.

IMPORTANT!
Down rating of pressure data and service life must be considered when using fire resistant fluid. Hägglunds or its authorised representative must always be contacted for approval in the case of these types of fluids.

Environmentally acceptable fluids

Fluid	Approved	Seals	Internal paint
Vegetable */** Fluid HTG	Yes	Nitrile (std motor)	–
Synthetic **/Esters HE	Yes	Nitrile (std motor)	–

* Vegetable fluids give good lubrication and small change of viscosity with different temperature. Vegetable fluids must be controlled every 3 months and temperature shall be less than +45 °C (113 °F) to give good service life for the fluid.
** Environmental acceptable fluid gives the same service life for the drive, as mineral oil.

Filtration

The oil in a hydraulic system must always be filtered and also the oil from your supplier has to be filtered when adding it to the system. The grade of filtration in a hydraulic system is a question of service life v.s. money spent on filtration.
In order to obtain stated service life it is important to follow our recommendations concerning contamination level.

When choosing the filter it is important to consider the amount of dirt particles that the filter can absorb and still operate satisfactory. For that reason we recommend a filter with an indicator that gives a signal when it is time to change the filter cartridge.

Filtering recommendations

Before start-up, check that the system is thoroughly cleaned.

- 1. In general the contamination level in our motors should not exceed ISO 4406 19/15 (NAS 10).
- 2. For industrial applications the contamination level should not exceed ISO 4406:1999 18/16/13 (NAS 1638, class 7).
- 3. When filling the tank and motor case, we recommend the use of a filter with the grade of filtration β10=75.

Explanation of "GRADE OF FILTRATION"

Grade of filtration β10=75 indicates the following:

- β10 means the size of particle ≥10µm that will be removed by filtration.
- =75 means the grade of filtration of above mentioned size of particle. The grade of filtration is defined as number of particles in the oil before filtration in relation to number of particles in the oil after filtration.
- Ex. Grade of filtration is β10=75.
- Before the filtration the oil contains N number of particles ≥10µm and after passing the filter once the oil contains $\frac{N}{75}$ number of particles ≥10µm.
- This means that $N - \frac{N}{75} = \frac{74 \cdot N}{75}$ number of particles have been filtered (= 98.6%).

3 Installation

3.1 Mounting instruction

It is important that the greatest care is taken when installing the motor, in order to ensure correct function.

Any component which is connected to the motor and which does not fulfil the requirements in the following instructions, can cause stresses which affect the working life of the motor. For each series of motors, the permitted radial and axial loads are given under technical data in the Engineering Manual.

The motor is normally filled with oil up to the shaft centre. If the oil tank is positioned above the shaft centre, the oil level will rise a corresponding amount. It is recommended that drainage is arranged so that the motor is completely filled with oil, especially at low speeds.

Bleeding of the motor can be carried out by help of the plug BSP 1 1/4" on the front end cover. The motor must always be connected so that sufficient charge pressure is obtained at the low pressure connection. This is especially important at high speed and with rapid reversing.

The drain port "D" must be connected directly (not restricted) to the tank in order to avoid exceeding the maximum permitted case pressure. The recommended inner diameter for the drain line is 18 mm or 3/4" for 44, 64-series and 28 mm or 1" for 84-series.

44-, 64- and 84-series
Max case pressure is 3 bar/43.5 psi (for 1% of the operation time evenly divided, pressure peaks of max 5 seconds up to 8 bar/116 psi are allowed).
The max permitted case pressure at stand-still is 8 bar/116 psi.

For motors fitted with silicon-rubber seals these pressures must be reduced by 50%. On the motor there is an arrow which indicates the direction of rotation. When oil is supplied to port “A” the motor rotates in this direction. The direction of rotation is also given on the identity plate (see example in the figure below).

IMPORTANT!
With long drain lines, and when flushing through the motor, careful calculations must be made to determine the line dimensions.

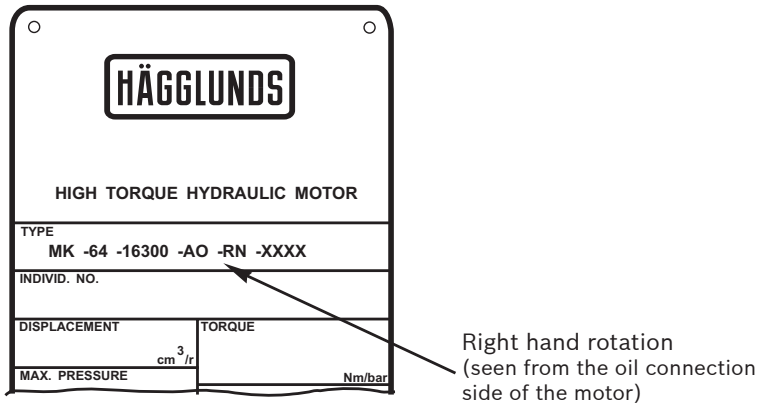

1.1.1 Common lifting methods
Lifting of motor

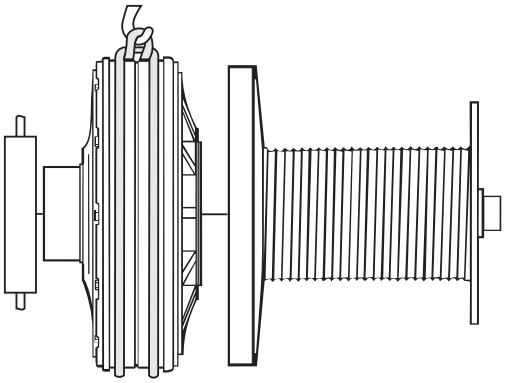

Fig. 5:

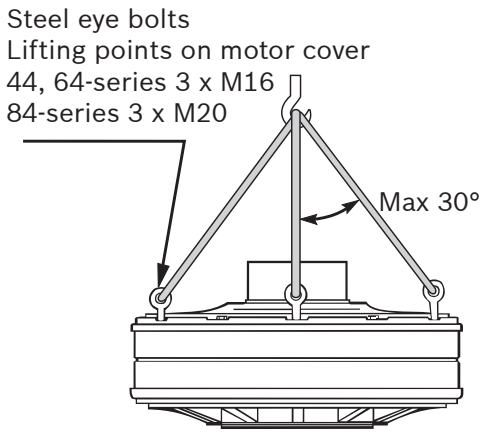

Fig. 6:

⚠ WARNING

Lifting straps must be chosen with reliable safety margin over the total weight of the lifted object.

Motor series	Motor		Motor + BB + BA +BCI	
	kg	lb	kg	lb
44	520	1 150	808	1 785
64	750	1 653	1 038	2 288
84	1 550	3 417	2 356	5 198

Lifting of torque arm

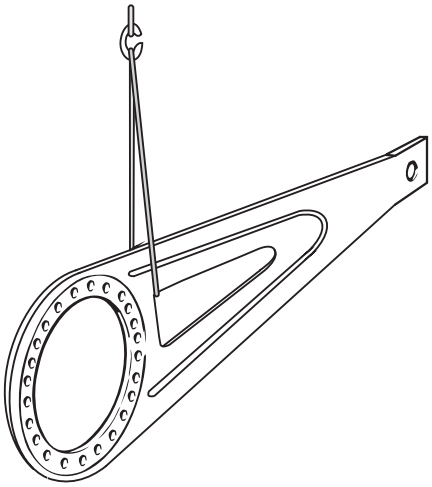

Fig. 7: TAC 1250-B

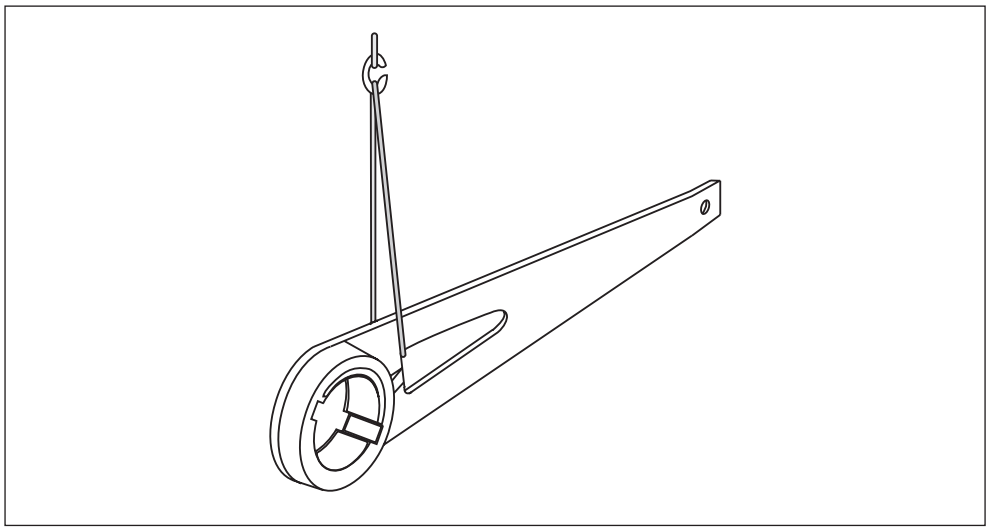

Fig. 8: TAC 1000-K

⚠ DANGER

Always make sure where the centre of gravity is before any lifting. Never stand below a hanging motor or the torque arm.

Torque arm	Weight	
	kg	lb
TAC 1000-K	69	152
TAC 1250-B	120	265

1.1.2 Motor – rope drum – shaft adapter

Mounting of rope drum or shaft adapter

Clean the mounting surfaces carefully before assembly. (This is a friction joint). Tighten the bolts to the correct tightening torque. All bolts shall be lubricated with oil, see below.

Eccentricity and axial wobble of mounting surfaces on associated equipment, such as shaft and rope drums, must not exceed 0.15 mm (0.006 in) for the inner and outer flanges.

Series 44 and 64

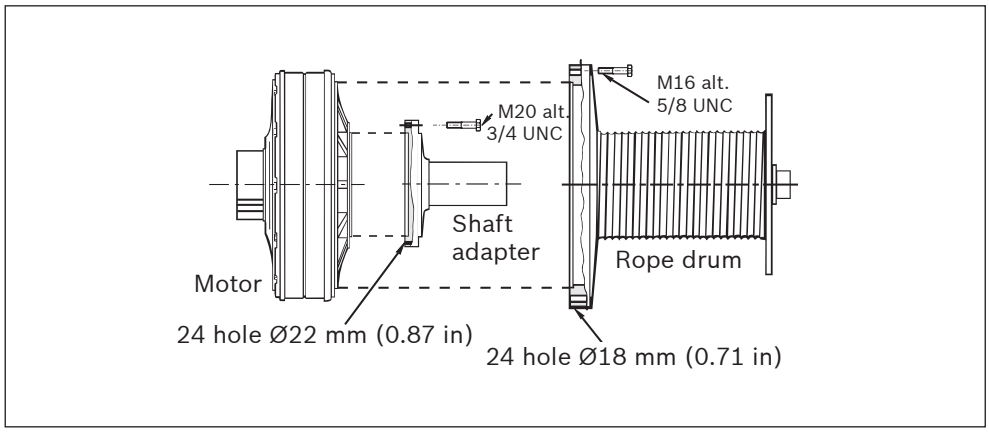

Fig. 9:

Tightening torque for assembly bolts, min. strength class 12.9* (ISO 898/1) :
Torque M16 = 340 Nm (250 lbf·ft)
Torque 5/8 UNC = 320 Nm (236 lbf·ft)
Torque M20 = 700 Nm (516 lbf·ft)
Torque 3/4 UNC = 600 Nm (443 lbf·ft)

* Class 12.9 is needed for max. allowed load on the motor. For less load, other bolts can be used.

Series 84

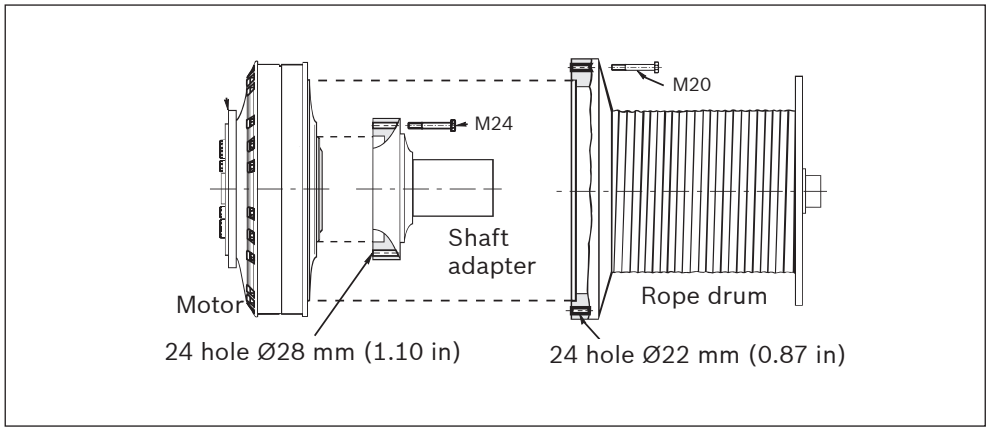

Fig. 10:

Tightening torque for assembly bolts, min. strength class 12.9* (ISO 898/1) :
Torque M20 = 700 Nm (516 lbf·ft)
Torque M24 = 1200 Nm (885 lbf·ft)

* Class 12.9 is needed for max. allowed load on the motor. For less load, other bolts can be used.

3.1.1 Motor – valves

Mounting of valve V 46-O on 44 – and 64-series motors

NOTICE
Before mounting of the valve, check that the motor is mounted into the bracket with “D2” connection on the motor mounting surface facing downwards, see figure 12.

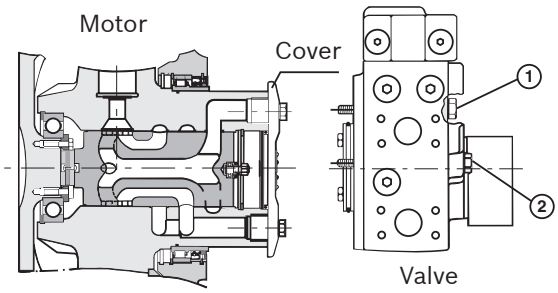

Fig. 11:

1: 4 pcs 5/8 UNC x 165 mm (6.5 in). Strength class 8.8 (ISO 898/1). Tightening torque 200 Nm (150 lbf·ft)
2: 2 st. 5/8 UNC x 178 mm (7 in). Strength class 8.8 (ISO 898/1). Tightening torque 200 Nm (150 lbf·ft)

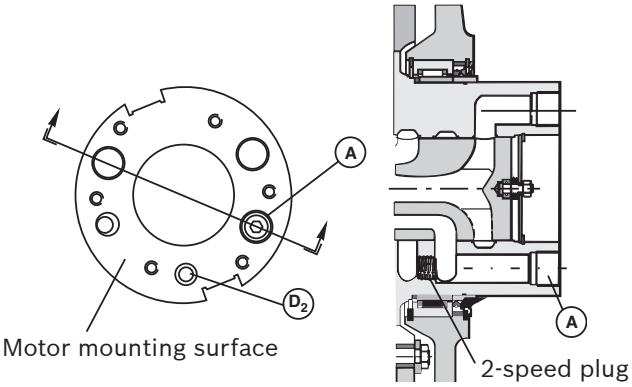

Fig. 12:

- Remove the cover on the motor mounting surface.
- Remove all plugs on the motor mounting surface.
- Mount the plug BSTP 3/4” (included in the mounting set) in the bottom of the hole for port “A” see figure 12.
- Place the O-rings in the proper position on the valve mounting surface. Use grease to keep the O-rings fixed.
- Mount the valve against the motor with the ports in the corresponding position.

Mounting of valve V 46-C on 44- and 64-series motors

NOTICE
Before mounting of the valve, check that the motor is mounted into the bracket with “D2” connection on the motor mounting surface facing upwards, see figure 14.

- Remove the cover on the motor mounting surface.
- Remove all plugs on the motor mounting surface.
- Mount the plug BSTP 3/4” (included in the mounting set) in the bottom of the hole for port “A”, see figure 14.
- Place the O-rings in the proper position on the valve mounting surface. Use grease to keep the O-rings fixed.
- Mount the valve against the motor with the ports in corresponding position.

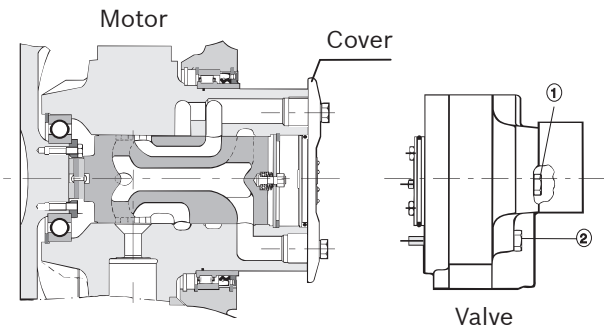

Fig. 13:

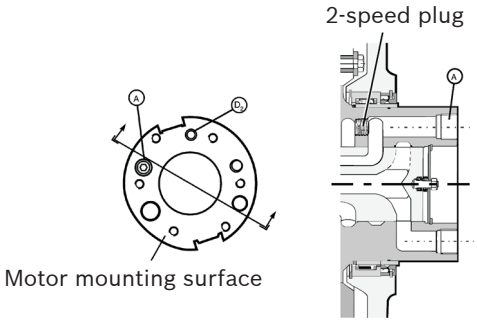

Fig. 14:

1.1.3 Motor – torque arm

Mounting of torque arm on series 44 and 64

- Remove the cover on the motor mounting surface
- Install the torque arm on cylinder block as shown in the figure.

In the installation, connection “D_2” on the motor should be upwards.

For TAC 1000-K, lubricate the hub and keys of the cylinder block with oil. Place the keys in their correct position and knock them in.

Notice! Do not knock the keys in so far that they damage the wear ring on the cylinder block.

A deformed wear ring can cause oil leakage.
• Install the cover.

⚠ CAUTION

Do not weld, drill, grind or carry out similar work on the torque arm without Hägglunds approval.

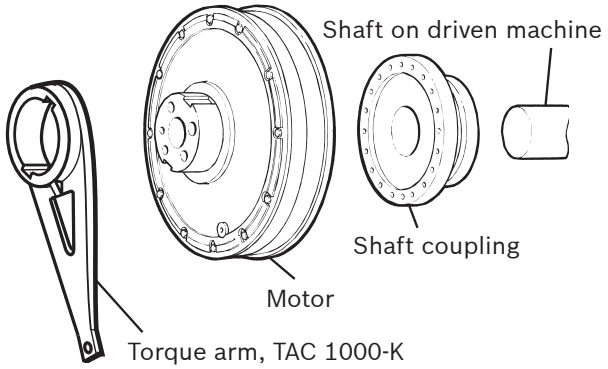

Fig. 15:

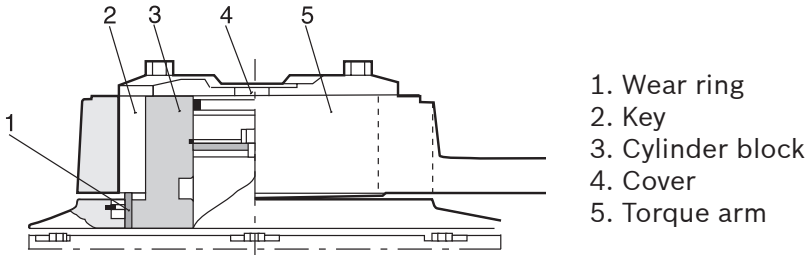

Fig. 16: Torque arm TAC 1000-K

Mounting of torque arm on series 84

- Mount the torque arm on the motor mounting flange. Connection “D1” should be upwards.
- Lubricate the screws with oil and tighten them to the prescribed tightening torque:

M24 – 1200 Nm (885 lbf·ft)
1” UNC – 1400 Nm (1033 lbf·ft)
Notice! With regard to the screws see the marking on motor rear cover.
One slot = Metric thread
Two slot = UNC thread

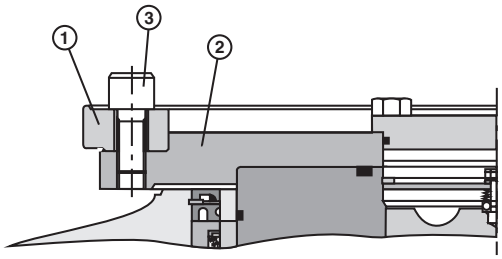

1. Torque arm
2. Motor mounting flange
3. 24 pcs MC6S 24 x 65 screws, strength class 12.9 (ISO 898/1), or 24 pcs UC6S 1” UNC x 64 (2 1/2”) screws, strength class 12.9 (ISO 898/1)

Fig. 17: Torque arm TAC 1250-B

Mounting of attachments

The attachments for TAC 1000-K and TAC 1250-B must be welded to the surround as shown in figure 18 and 19. For the stiff attachment it is only necessary for one of the assembly surfaces to be welded.

Quality requirements:

Welding class K1 according to HS 2020 2015, EN 25 817:1992.
Welding class Sv2 according to Building Welding Standard StBk-N2.
Welding class AK according to DIN 8562. ASME Boiler Code Section VIII.
BS 1500:1 and BS 1515:1.

NOTICE
It is strongly recommended to use pivoted attachment

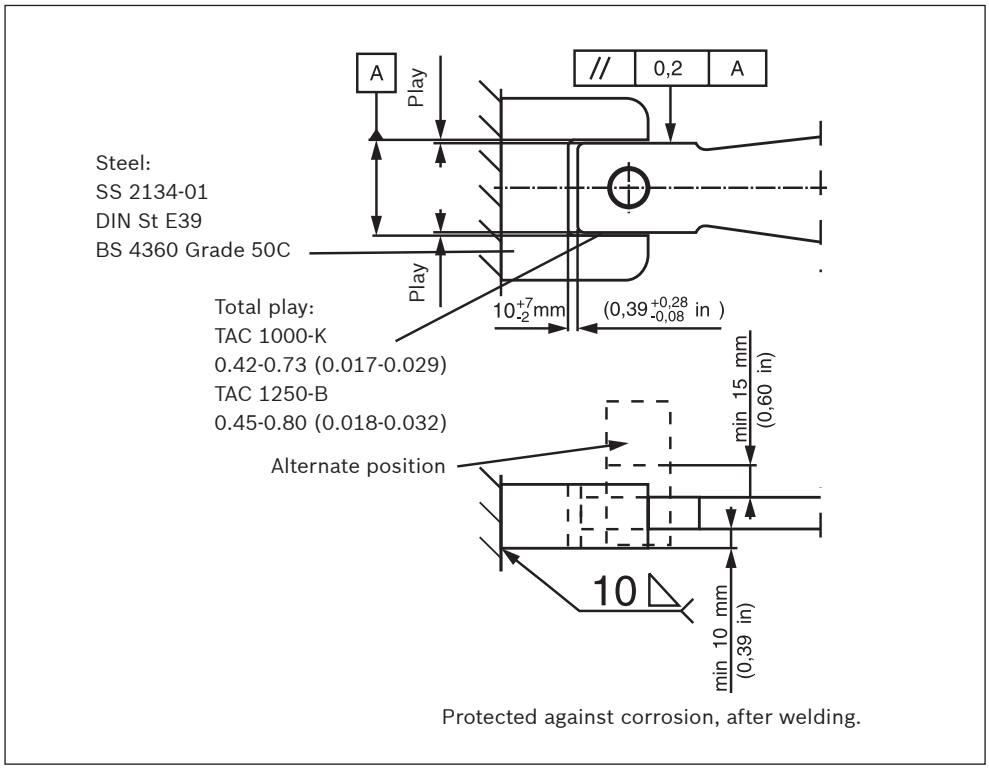

Fig. 18: Mounting of stiff attachment

Mounting of torque arm on series 84

The pivoted attachment is to be mounted and adjusted as shown in figure 19 and 20.

Checking

Check that the free end of the torque arm is able to move within the directions and tolerances at the attachment as prescribed in figure 18 and 19.

For lubrication of the torque arms, see 4.4 “Periodic maintenance”.

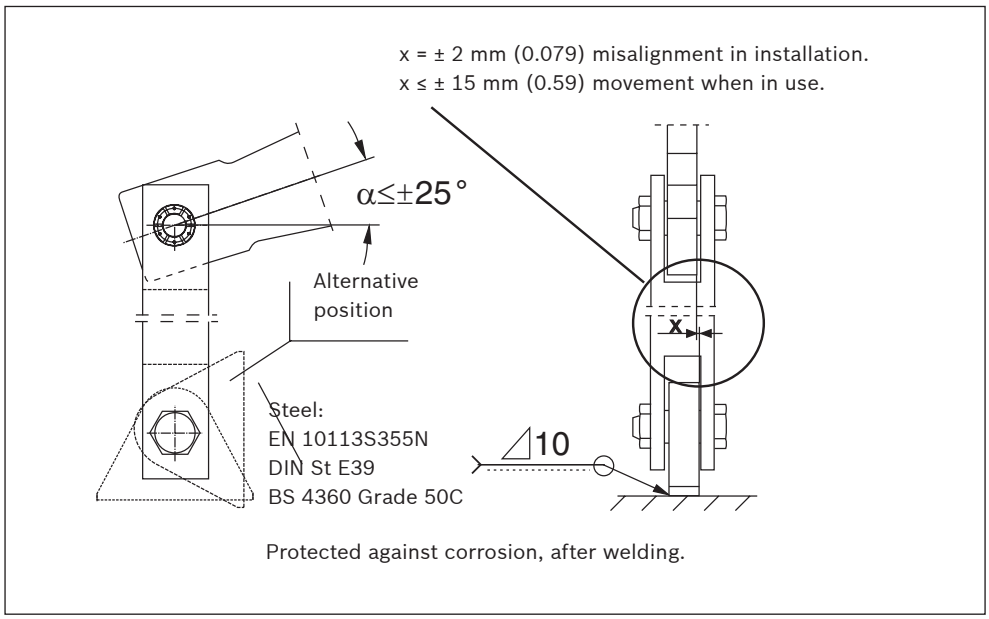

Fig. 19: Mounting of pivoted attachment

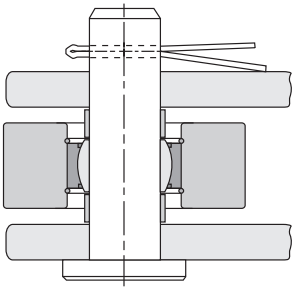

Fig. 20: Mounting of torque arm on pivoted attachment

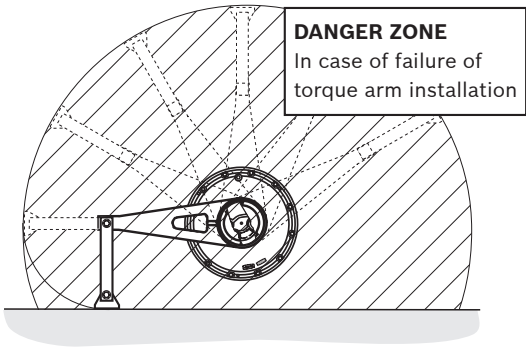

Fig. 21:

Removal of the torque arm for series 44 and 64

Use a suitable puller to pull off the torque arm. The puller holes are shown in the figure 22.

Notice! If the torque arm is difficult to pull off, its hub may be cautiously heated.

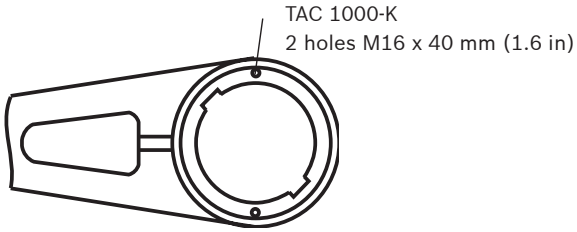

Fig. 22: Puller holes on TAC 1000-K

⚠ DANGER

Make sure that the foundation can withstand the forces from the torque arm.

⚠ WARNING

Before starting the motor, check that the rotating motor case can not cause damage.

3.1.2 Motor – front bracket

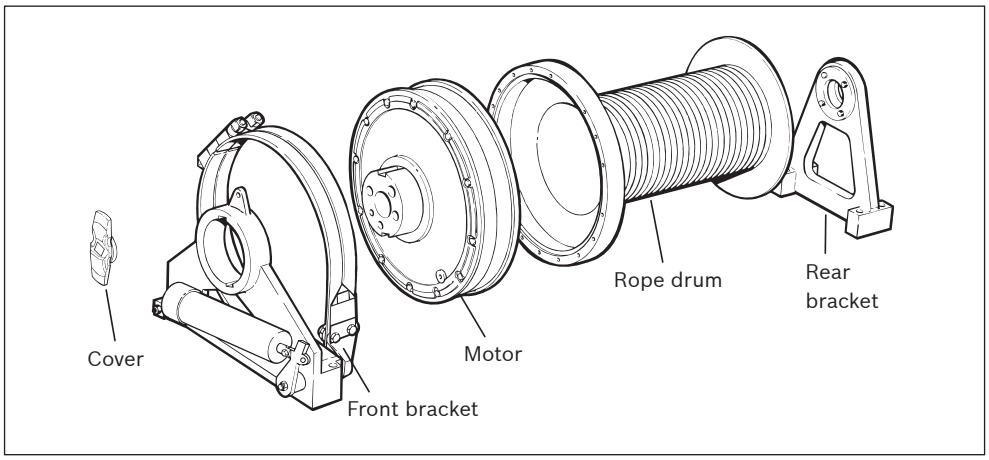

Fig. 23:

Mounting of front bracket on series 44 and 64

- Remove the cover.
- Place the motor in the bracket. When installing the motor the “D2”-connection should be upwards*.
- Lubricate the hub and keys of the cylinder block with oil. Place the keys in the correct positions and tap them in.
- Install the cover.

Notice! Do not knock the keys in so far that they damage the wear ring on the cylinder block. A deformed wear ring can cause oil leakage.
See 3.1.4 “Motor – torque arm, mounting of torque arm on series 44 and 64.”

---

* If valve V46-O is used, the “D2”- connection on the motor must be facing downwards.

Mounting of front bracket on series 84

- Place the motor in the bracket. “D1”- connection on the motor should be upwards. Lubricate the screws with oil and mount them.

Tightening torque: M24 – 1200 Nm (885 lbf·ft)

Notice! With regard to the screws see the marking on motor rear cover.
One slot = Metric thread
Two slots = UNC thread
See 3.1.4 “Motor - torque arm, mounting of torque arm on series 84.”

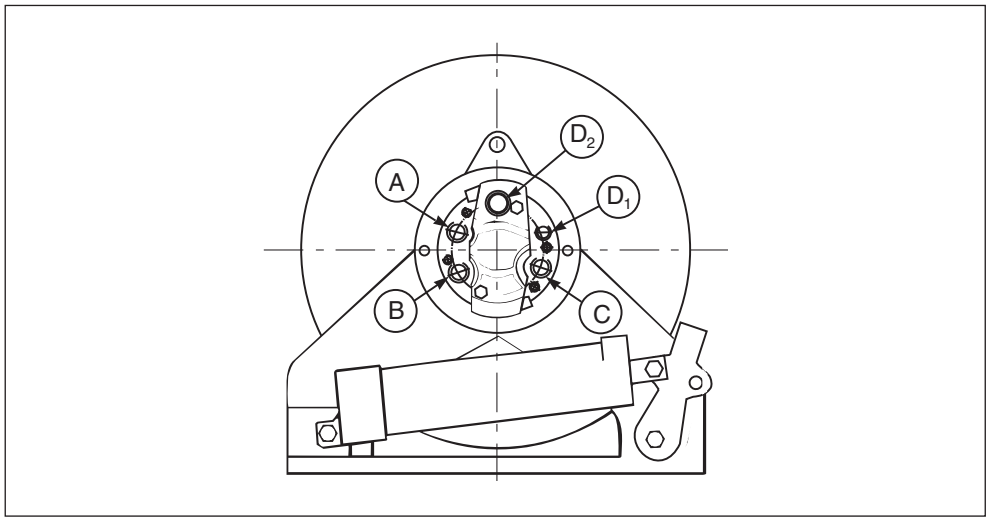

Fig. 24:

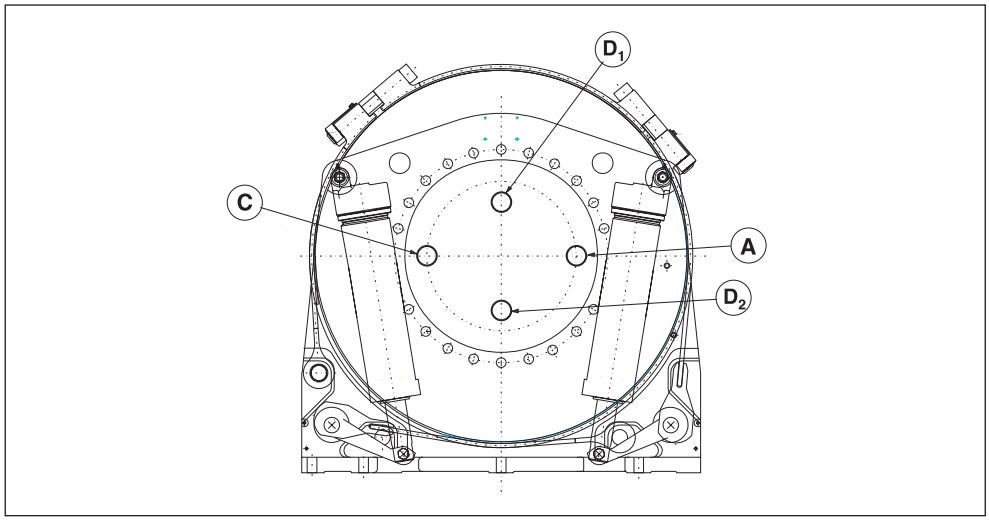

Fig. 25:

DANGER

Never stand below the motor during dismounting.

WARNING

Always make sure that the lifting equipment is strong enough to handle the weight of the motor.

Mounting of bracket BB-46 and BB-85 on foundation

Bracket	Screws			Screws			Flatness requirements against foundation (bracket area only)	Weight	
	Thread	Strength class (ISO 898/1)	Tightening torque Nm/lbf·ft	Thread	Strength class (ISO 898/1)	Tightening torque Nm/lbf·ft		kg	lb
BB-46	M24	10.9	960/710	1” UNC	10.9	1100/810	0.5 (0.0197)	150	330
BB-85	M24	10.9	960/710	1” UNC	10.9	1100/810	0.5 (0.0197)	496	1094

Drill coordinates

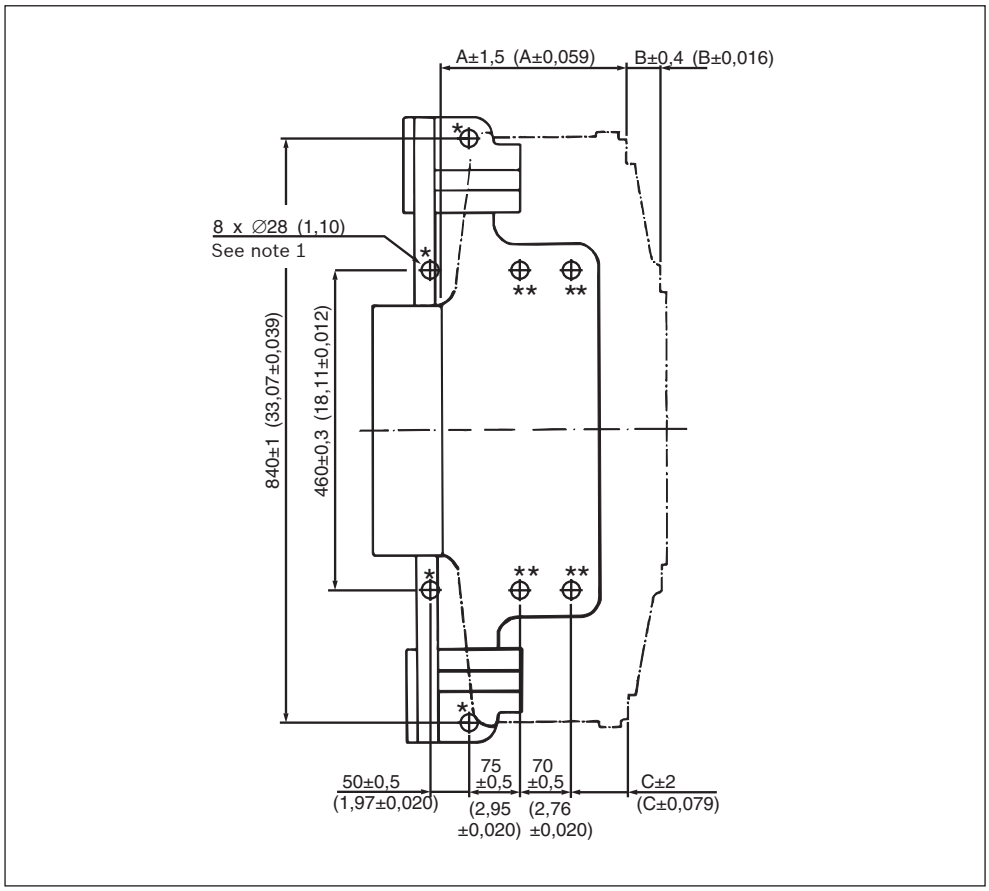

Fig. 26: BB-46

Motor series	Dimensions					
	A		B		C	
	mm	inch	mm	inch	mm	inch
44	257	10.1	43	1.69	74	2.91
64	264	10.3	48	1.88	81	3.19

Notice!

Only marked holes (*) are necessary for mounting of bracket without brake assembly.

**Length of bolts for brake bands 64-motor = 90 (3.5), 44-motor = 130 (5.0)

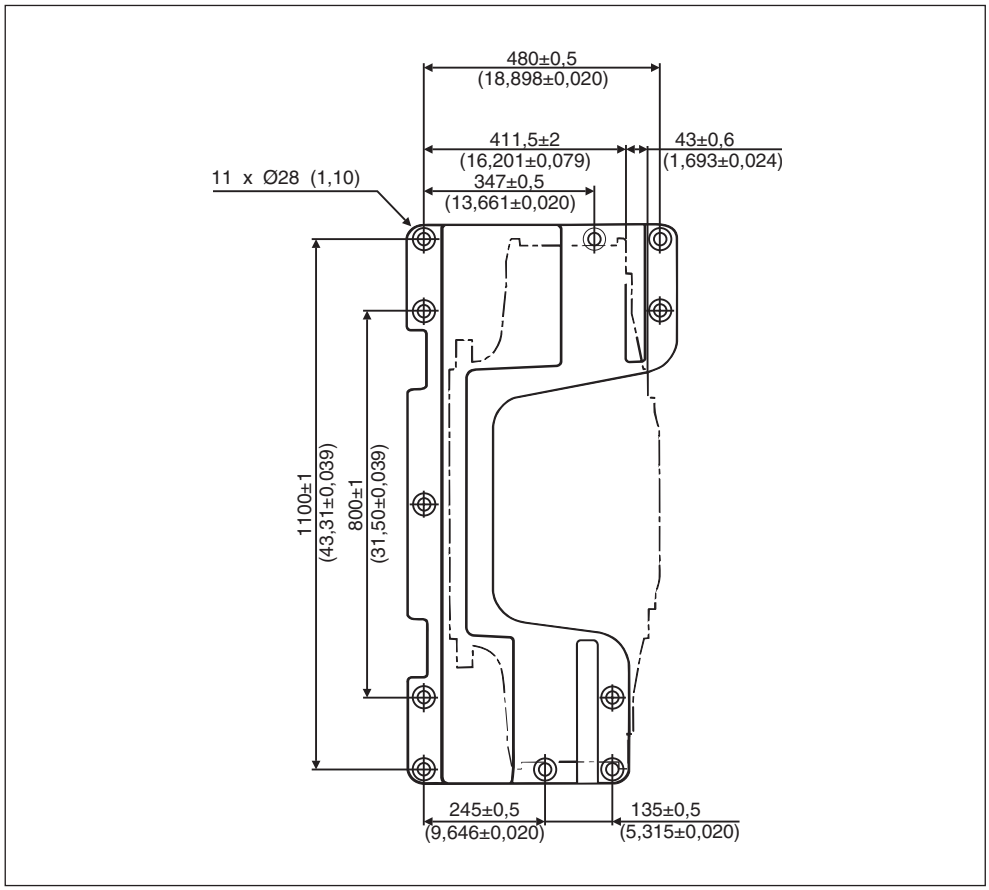

Fig. 27: BB-85

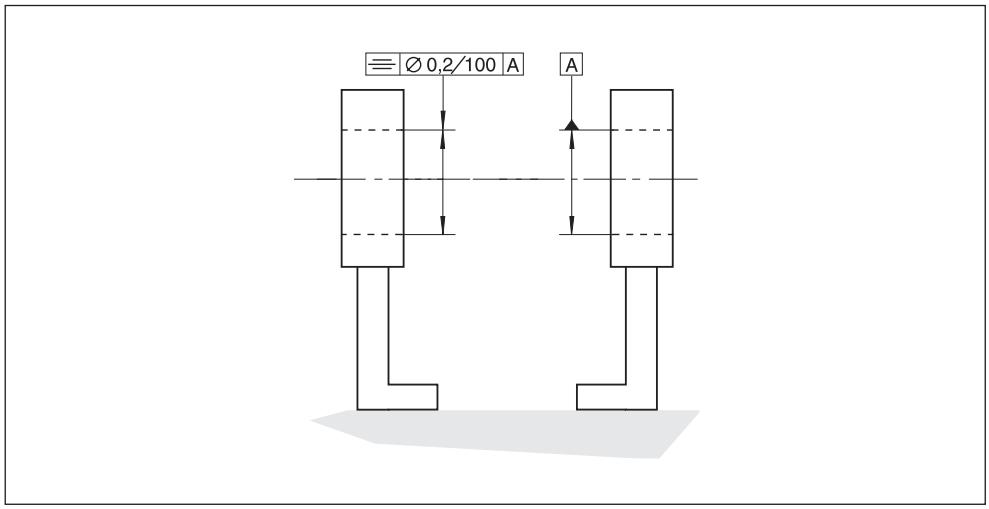

Fig. 28: Max. parallelism error between two brackets

Mounting of winch on foundation

Method No. 1

• A separate frame machined after welding to a parallel tolerance of:

▱ 0,2/100

• The frame can be welded or bolted onto the foundation.

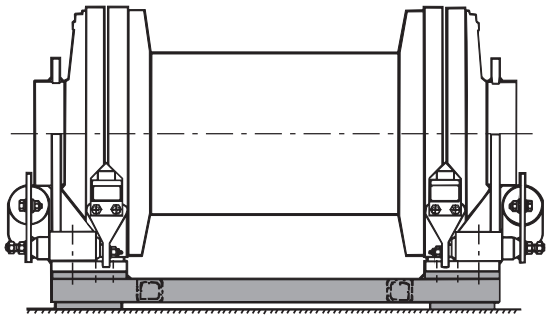

Fig. 29:

Method No. 2

• Machine the surfaces of the frame parts against the brackets to a flatness 0.5 mm (0.020 in)
• Weld the frame parts on the foundation with a lining tool (if necessary, use the winch as alignment tool).
• After welding take off the alignment tool and put 1-2 mm (0.04-0.08 in) thick layer of Devcon B-compound between the brackets and the frame parts. Assemble the winch without tightening the screws.
• Let the Devcon B-compound harden ac-cording to the Devcon B-specification.
• Tighten the screws, see tightening torque for respective bracket.

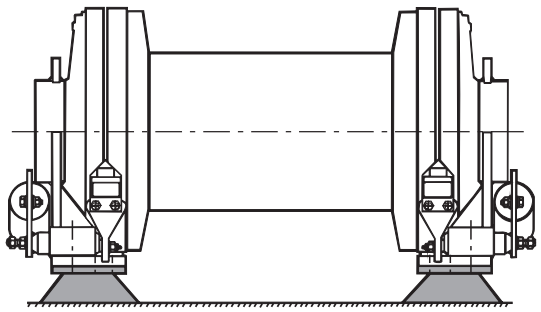

Fig. 30:

Method No. 3

- Machine the surfaces of the frame parts against the brackets to a flatness 0.5 mm (0.020 in).
- Weld the frame parts on the foundation with a alignment tool (if necessary, use the winch as alignment tool).
- After welding take off the alignment tool and place a ruler on the two frame parts and use feeler gauges to find out the thickness of shims on each screw position.
- Place shims in the screw positions and assemble the winch.
  Tightening torque: see tightening torque for respective bracket.

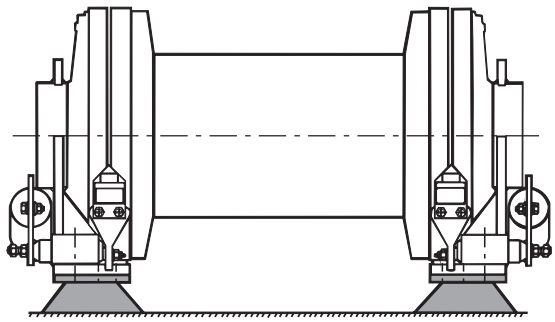

Fig. 31:

Brake assembly BA-43 and BA-63

Brake assembly	Braking torque in braking force direction* with friction factor μ = 0.35 after running-in period			
	Single acting		Double acting	
	Nm	lbf·ft	Nm	lbf·ft
BA-43	76 000	56 000	55 000	40 500
BA-63	90 000	66 300	65 000	47 900

* If the brake is used opposite to its designated force direction, about 20% of its braking capacity can be expected.

⚠ WARNING

Oil on the brake linings reduces the braking torque.

Braking force direction

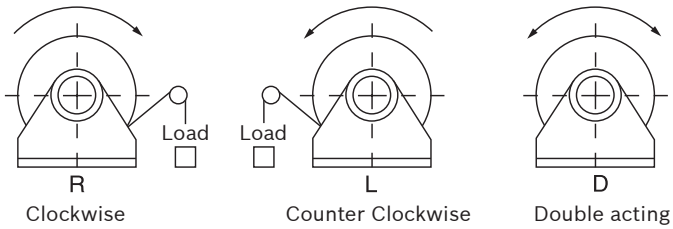

Fig. 32:

Dimensions
BA-43 and BA-63, single acting

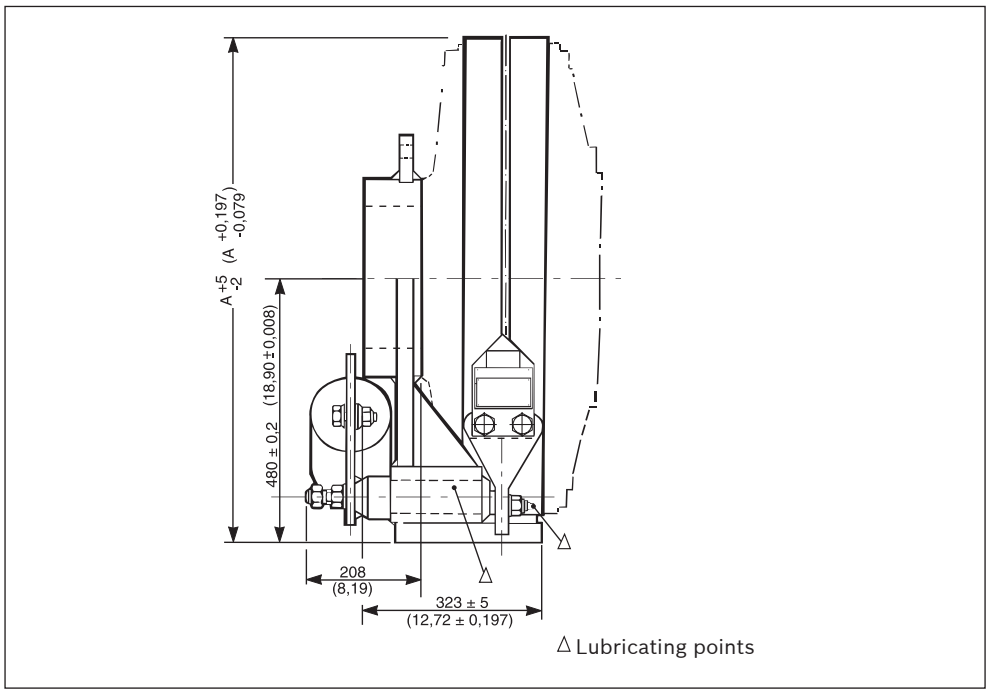

Fig. 33:

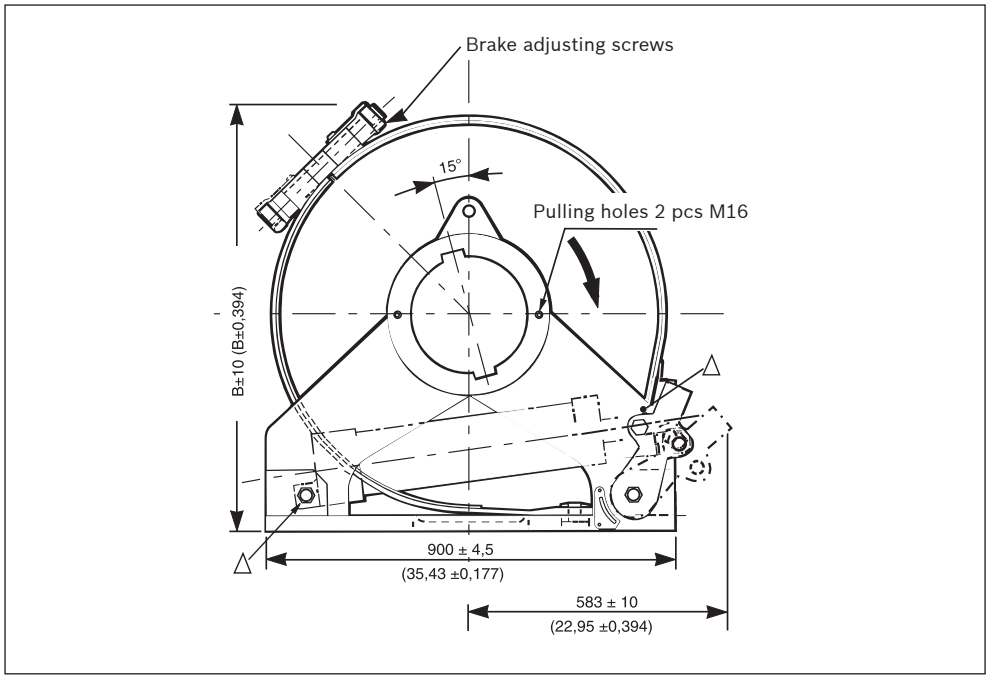

Fig. 34:

Motor series	A		B	
	mm	inch	mm	inch
44	871	34.29	906	35.67
64	915	36.02	950	37.40

Dimensions
BA-43 and BA-63, double acting

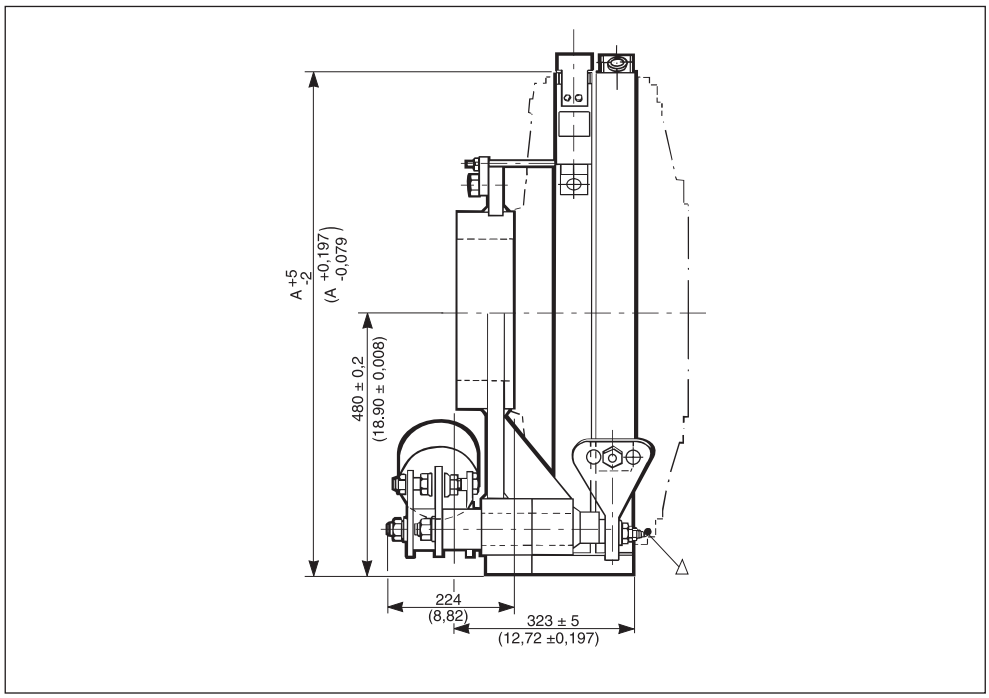

Fig. 35:

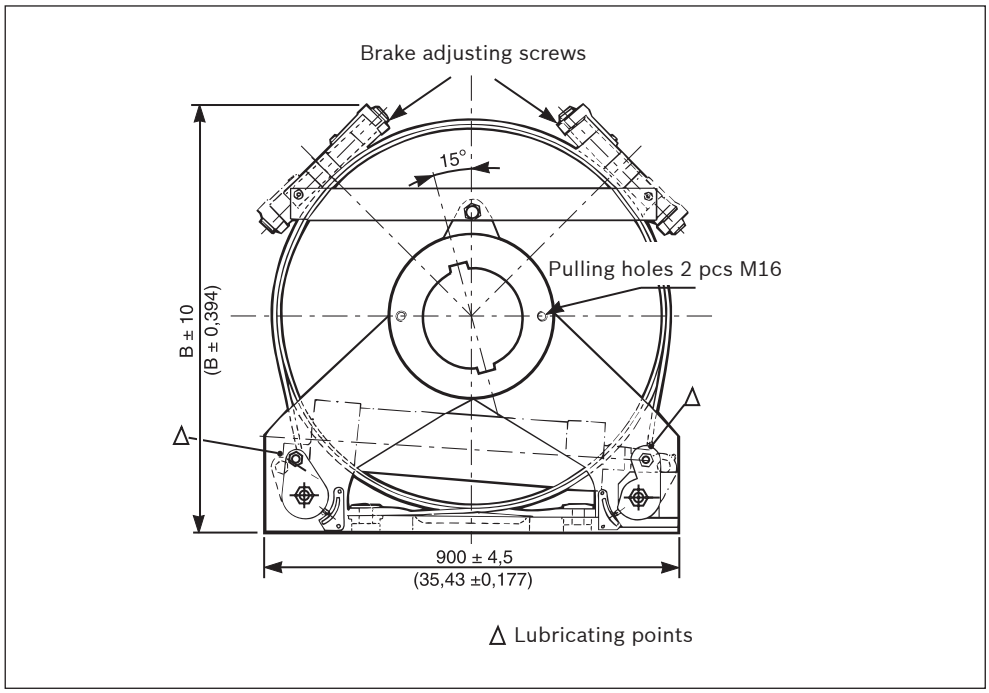

Fig. 36:

Motor series	A		B	
	mm	inch	mm	inch
44	871	34.29	906	35.67
64	915	36.02	950	37.40

Replacement of brake band

The brake lining is worn or damaged out and the complete brake band must be exchanged when the measurement, band plus lining, is as shown in figure 37.

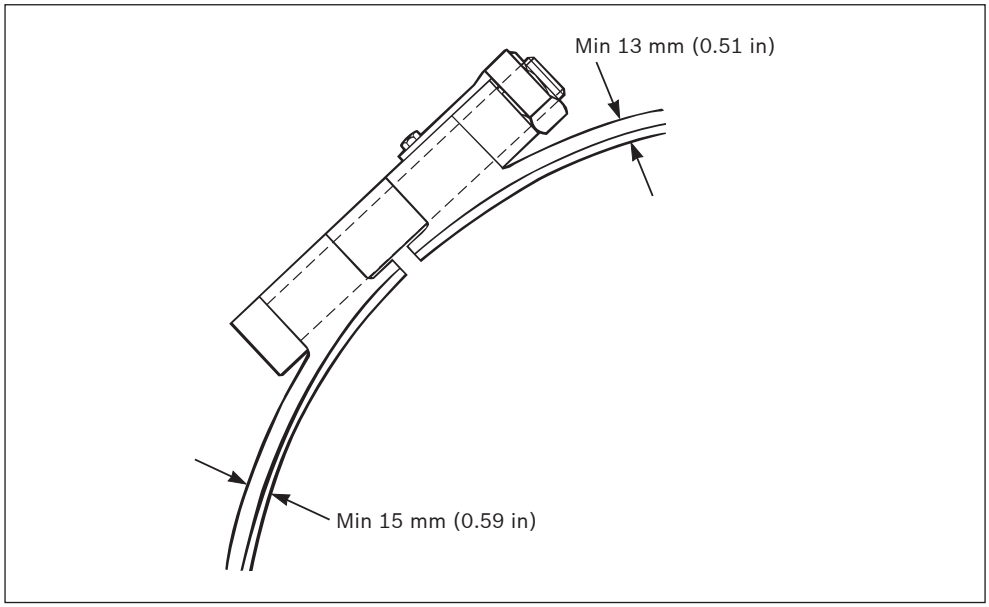

Fig. 37:

Brake adjustment BA-43 and BA-63

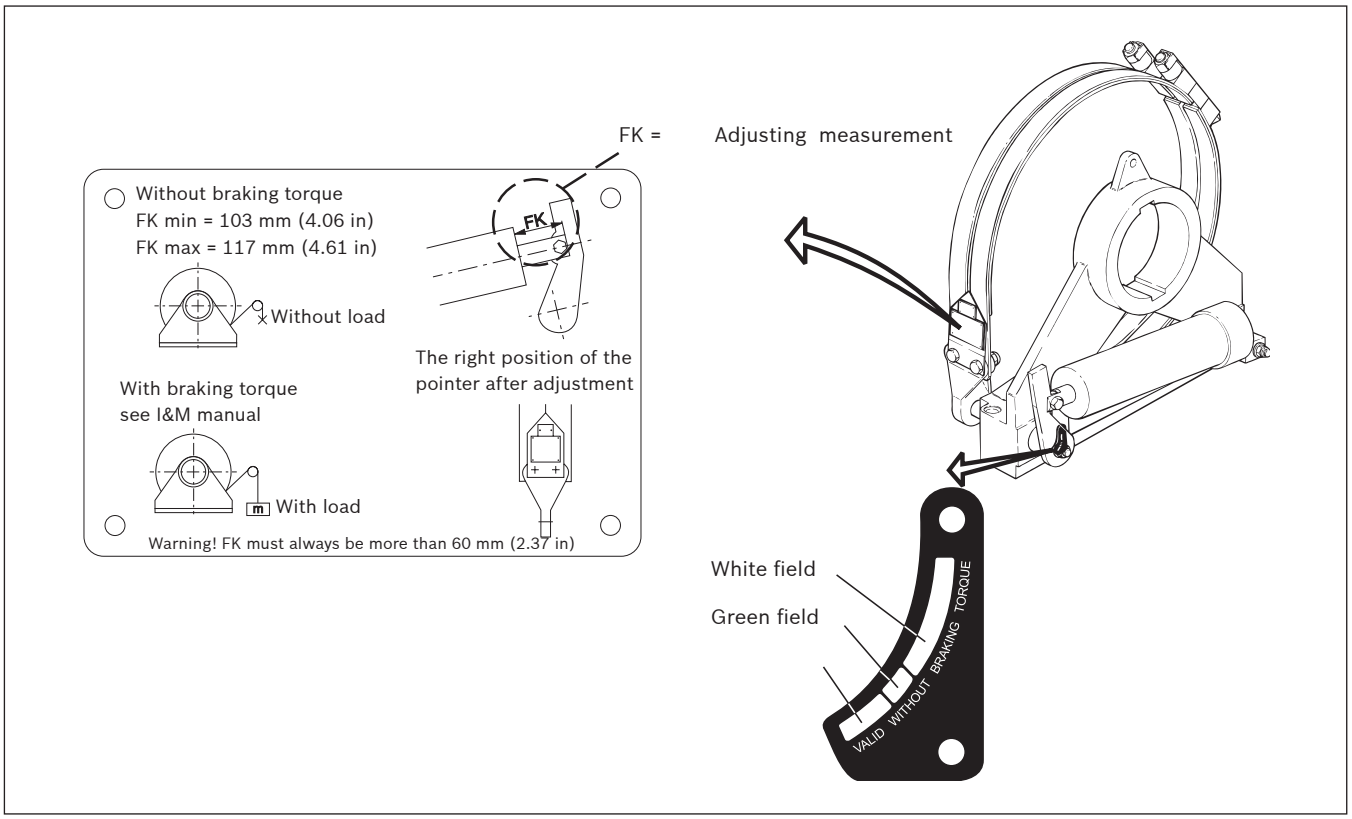

Fig. 38: Single acting, sign 1

⚠ WARNING

Because they must be run-in, the measurement FK is to be 127 mm (5.0 in) with newly installed brake linings. Check the FK measurement after approximately 10 brake operations and adjust it to 117 mm (4.61 in).

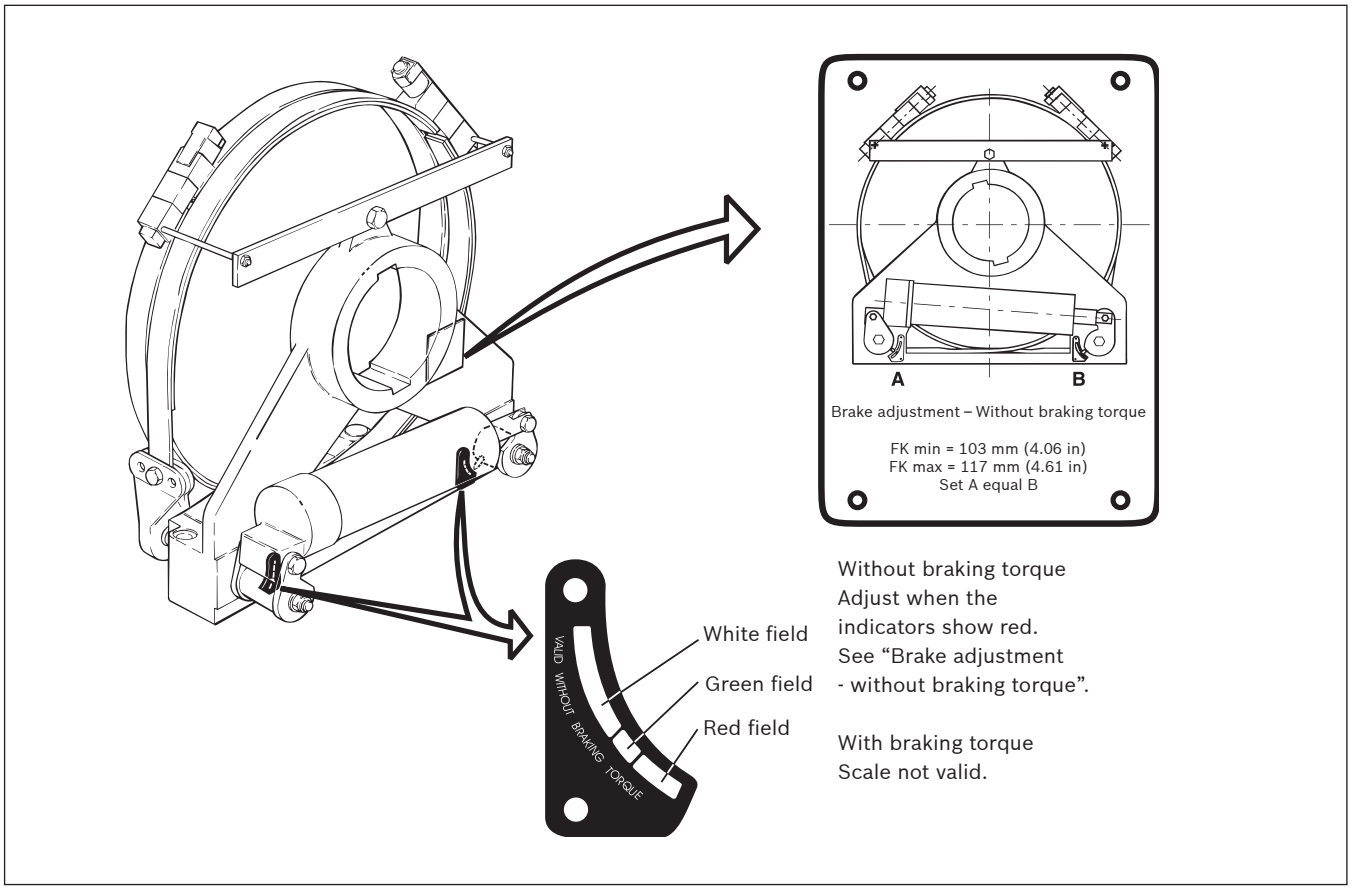

Fig. 39: Double acting, sign 2

Brake adjustment BA-43 and BA-63
Single acting
Brake adjustment without braking torque.

1. Remove locking devices on adjustment screws.
2. Stretch the bands with the adjustment screws when the pressure is applied to the brake cylinder. Check that the bands are evenly adjusted by means of the pointer, see sign 1. Drain the brake cylinder and check the measurement FK. Adjust until this is 117 mm (4.61 in). The scale indicator, sign 2, should then show green.
3. Replace the locking devices on the adjustment screws.

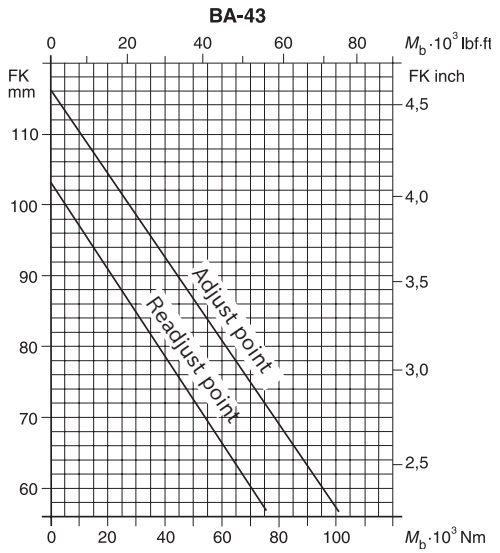

Adjustment of brakes with braking torque.

The value of the braking torque must be used when checking the adjustment. Read from the diagram if adjustment is necessary.

See “Brake adjustment without braking torque” for the adjustment procedure.

Example: With BA-63, a line force F of 100 000 N and a line drum of radius r = 0.5 m, the braking torque is Mb = 50 000 Nm. The brake is to be adjusted if the measurement FK is less than 77 mm (3.03 in). Adjust FK to 91 mm (3.58 in). See the diagram for BA-63.

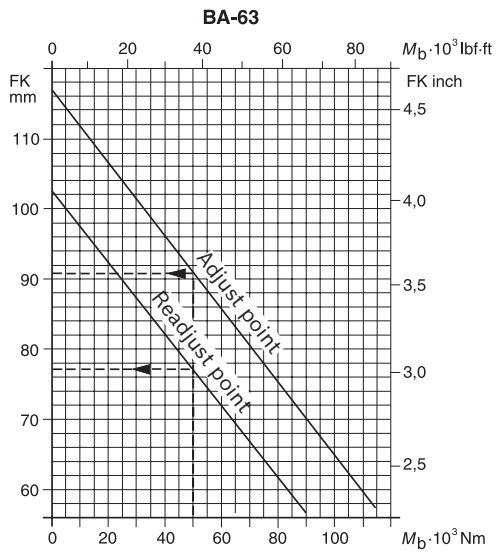

⚠ WARNING

Adjustment-check of brakes with braking torque is only to be performed when the brakes cannot be relieved of braking torque.

Double acting

Brake adjustment without braking torque.

1. Remove locking devices on adjustment screws.
2. Stretch the bands with the adjustment screws when the pressure is applied to the brake cylinder. Check that the bands are adjusted evenly by the scales indicating the same. See sign 1. Drain the brake cylinder and check the measurement FK. Adjust until this is 117 mm (4.61 in). The scale indicators, sign 2, should show green.
3. Replace the locking devices on the adjustment screws.

Brake adjustment with braking torque

Not possible.

Brake assembly BA-85

Brake assembly	Braking torque in braking force direction* with friction factor μ = 0.35 after running-in period			
	Single acting		Double acting	
	Nm	lbf·ft	Nm	lbf·ft
BA-85	195 000	143 800	120 000	85 000

* If the brake is used opposite to its designated force direction, about 20% of its braking capacity can be expected.

Braking force direction

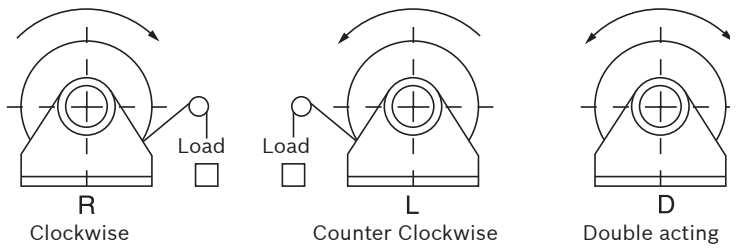

Fig. 40:

⚠ WARNING

Oil on the brake linings reduces the braking torque.

Dimensions BA-85 single and double acting.

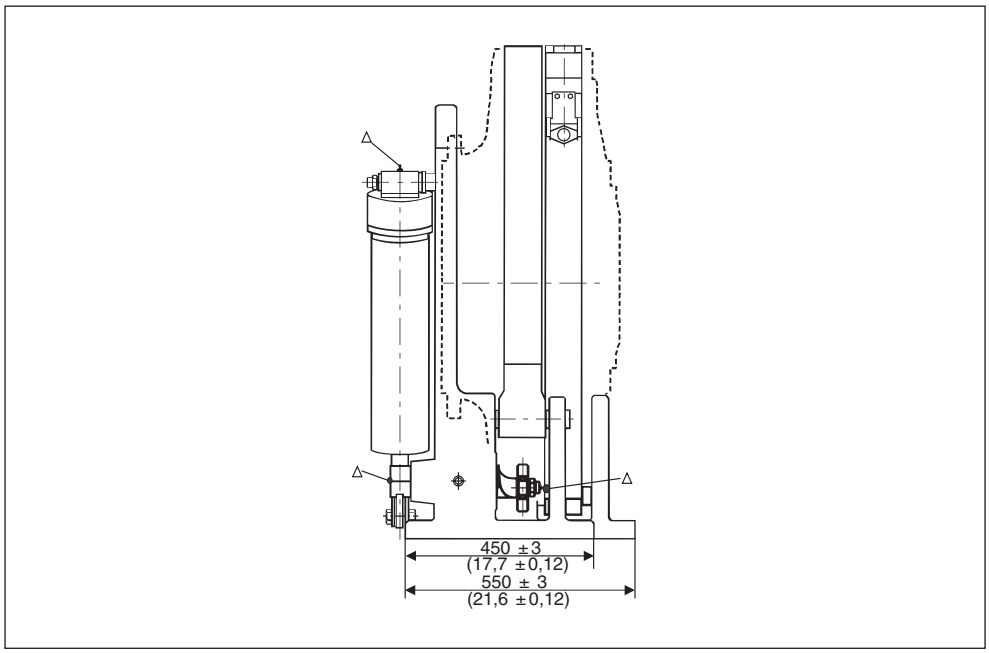

Fig. 41:

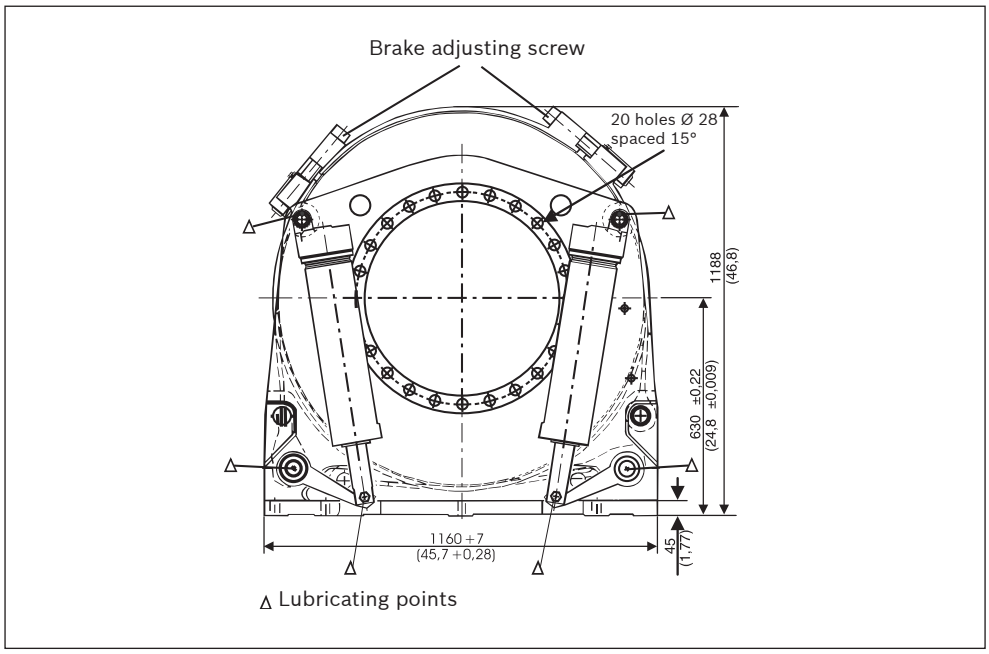

Fig. 42:

Replacement of brake band

The brake lining is worn out and the complete brake band must be exchanged when the measurement, band plus lining, is as shown in figure 43.

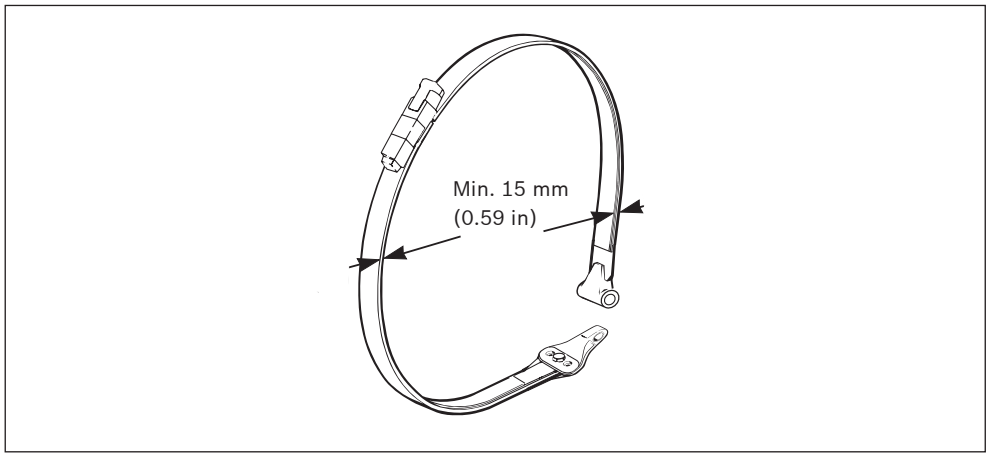

Fig. 43:

⚠ WARNING

Because they must be run-in, the FK measurement with new brake bands must be 117 mm (4.61 in). Check the FK measurement after approximately 10 brake operations and adjust it to 107 mm (4.21 in).

Brake adjustment BA-85

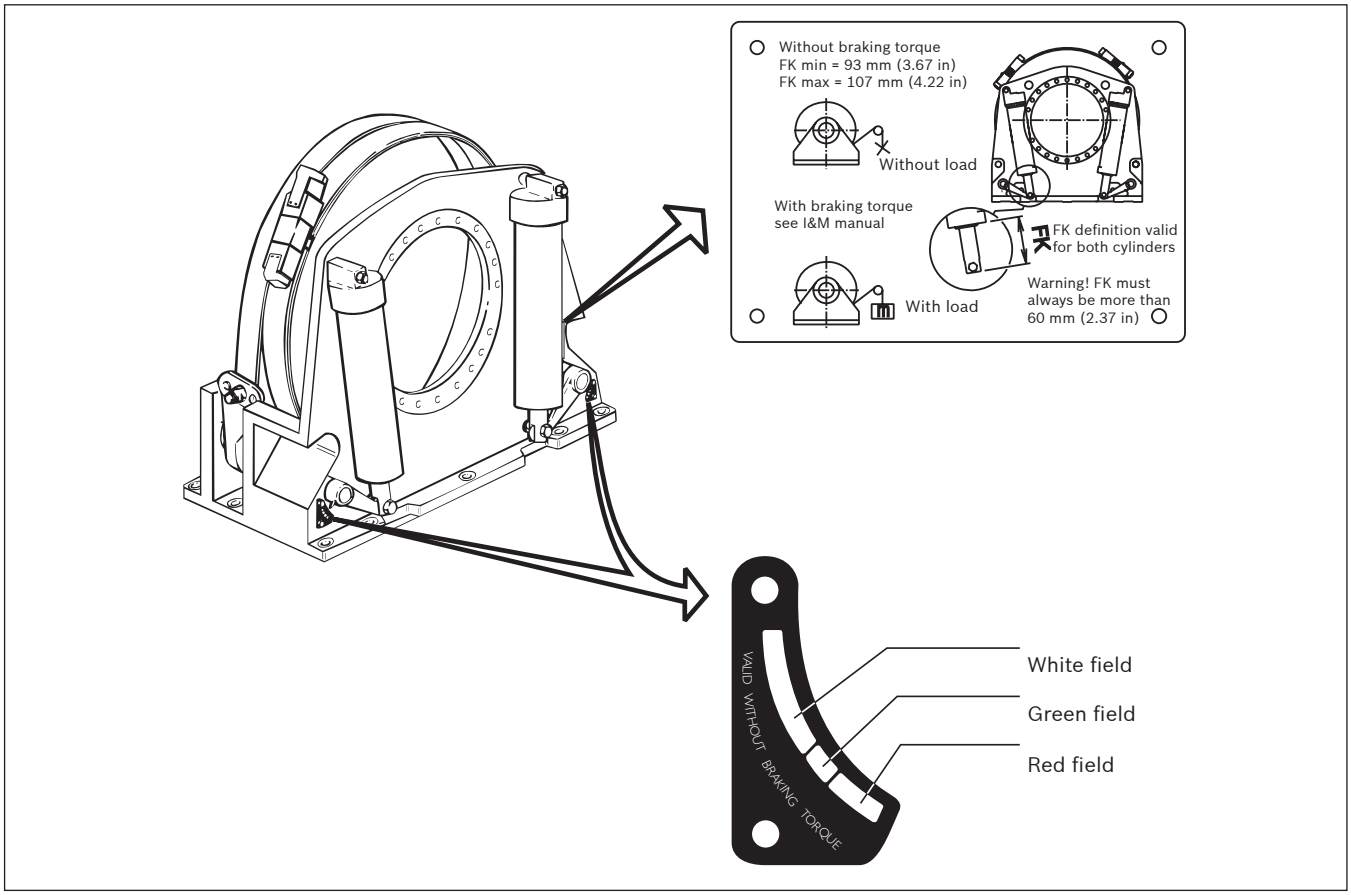

Fig. 44: Double acting, sign 2

Without braking torque
Adjust when the indicators show red. See “Brake adjustment without braking torque”.

With braking torque
Scale not valid.

For adjustment of brakes with torque applied, see below.

Brake adjustment without braking torque
1. Remove locking devices on adjustment screws.
2. Stretch the bands with the adjustment screws when the pressure is applied to the brake cylinder. Drain the brake cylinder, check the measurement FK and adjust to 107 mm (4.21 in). The scale indicators, sign 2, should then show green.
3. Replace the locking devices on the adjustment screws.

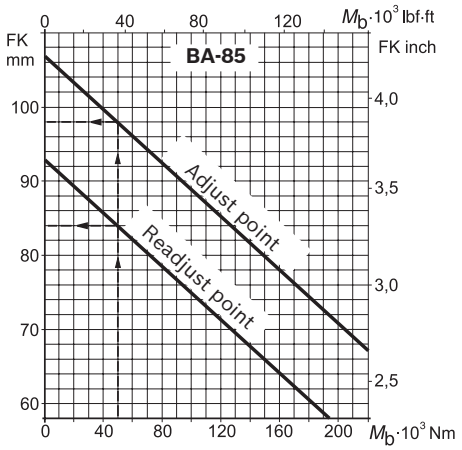

Adjustment of brakes with braking torque

⚠ WARNING

Adjustment-check of brakes with braking torque is only to be performed when the brakes cannot be relieved of braking torque.

The value of the braking torque must be used when checking the adjustment. Read from the diagram if adjustment is necessary.
See “Brake adjustment without braking torque” for the adjustment procedure.
Example: With BA-85, a line force F of 100 000 N and a line drum of radius r = 0.5 metres, the braking torque is Mb = 50 000 Nm. The brake is to be adjusted if the FK measurement is less than 84 mm (3.31 in). Adjust FK to 98 mm (3.86 in).

Brake cylinder BCI-M for brake assembly BA-43, BA-63 and BA-85

Brake cylinder type	Begins to open at pressure in ”A”-port		Completely open at pressure in ”A”-port		Max. allowed pressure				Displacement		Weight	
					”A”-port		”D”-port					
	bar	psi	bar	psi	bar	psi	bar	psi	cm^3	in^3	kg	lb
BCI M-1X-XXX	4	58	8	115	320	4 600	320	4 600	1300	79.3	68	150
BCI M-30-XXX	16	230	26	380	320	4 600	320	4 600	350	21.4	70	154

Low pressure operation
BCI M-10 – XXX (without flushing)

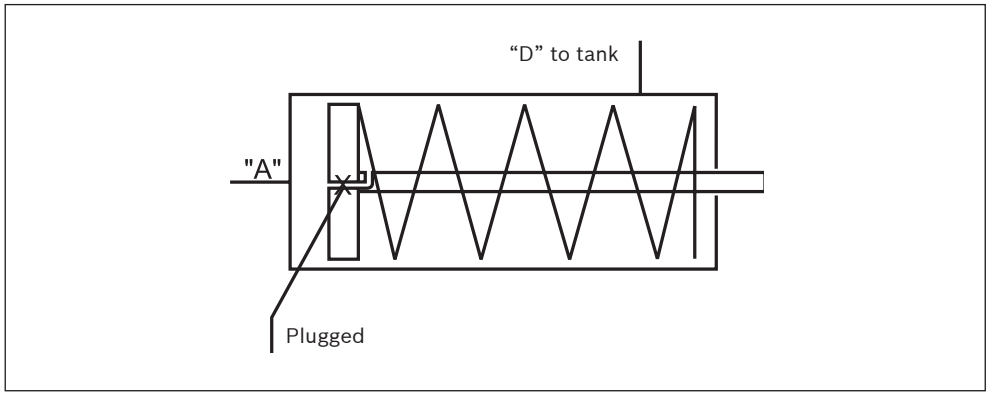

Fig. 45:

BCI M-11 – XXX (with flushing)

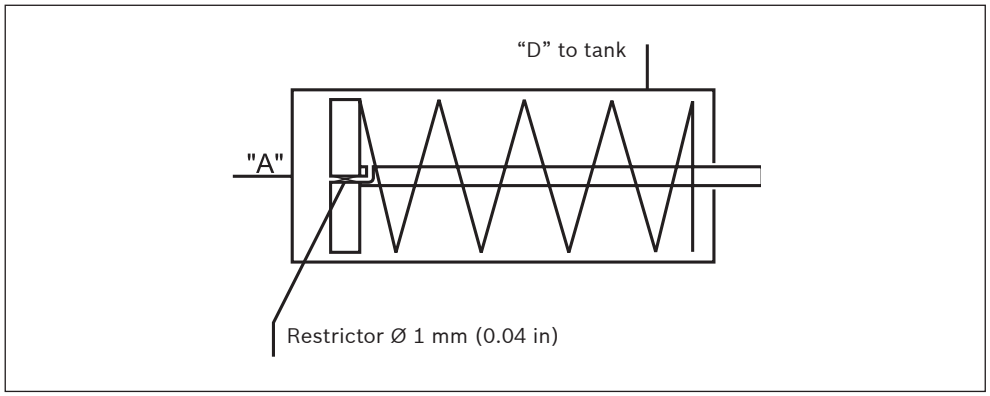

Fig. 46:

At Δp 2 bar (29 psi) the flushing flow is	0.9 lit/min
At Δp 5 bar (72 psi) the flushing flow is	1.4 lit/min
At Δp 10 bar (145 psi) the flushing flow is	2.0 lit/min
At Δp 15 bar (217 psi) the flushing flow is	2.4 lit/min

High pressure operation
BCI M-30 – XXX (without flushing)

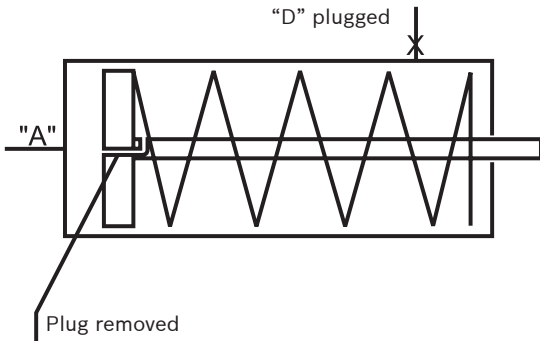

Fig. 47:

Notice! Alternatively “D”-port can be used as main port, but then “A”-port must be plugged. To assure good venting, choose the connection at the highest point as main port.

Removal of the plug

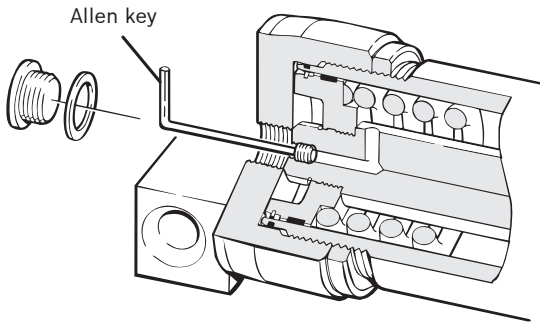

Fig. 48:

⚠ DANGER

Do not disassemble the brake cylinder without special tools.

Draining of brake cylinders

The diagram below shows how the braking torque $M_{max.}$ for different brake cylinders falls in proportion to the counter pressure in the brake cylinder drain line.

Example:
Double-acting brake equipment BA-63 has a brake cylinder designated BCI-M-1X and a maximum braking torque ($M_{max.}$) of 65 000 Nm/47 900 lbf·ft when the brake cylinder is not under pressure and μ = 0.35.
Assume that the counter pressure in the brake cylinder drain line is 1.5 bar/75 psi. The diagram then shows the actual brake torque ($M_{act.}$) that corresponds to only 60% of $M_{max.}$.

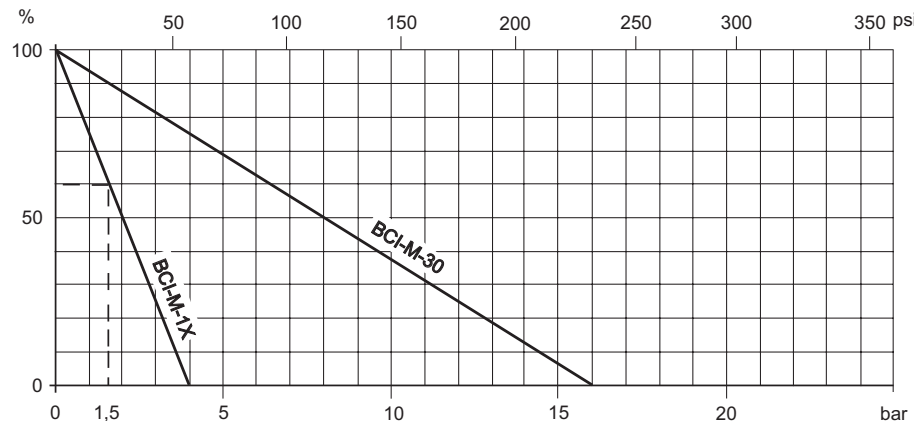

Back pressure in brake cylinder drainage line.

⚠ WARNING

If the brake is used in cold environment as an emergency brake, it must be flushed.

⚠ WARNING

Motors with special brakes may have different working operations.
Please check the ordering code for your brake.

Installation of brake assembly BA-43, BA-63 single acting and brake cylinder BCI-M

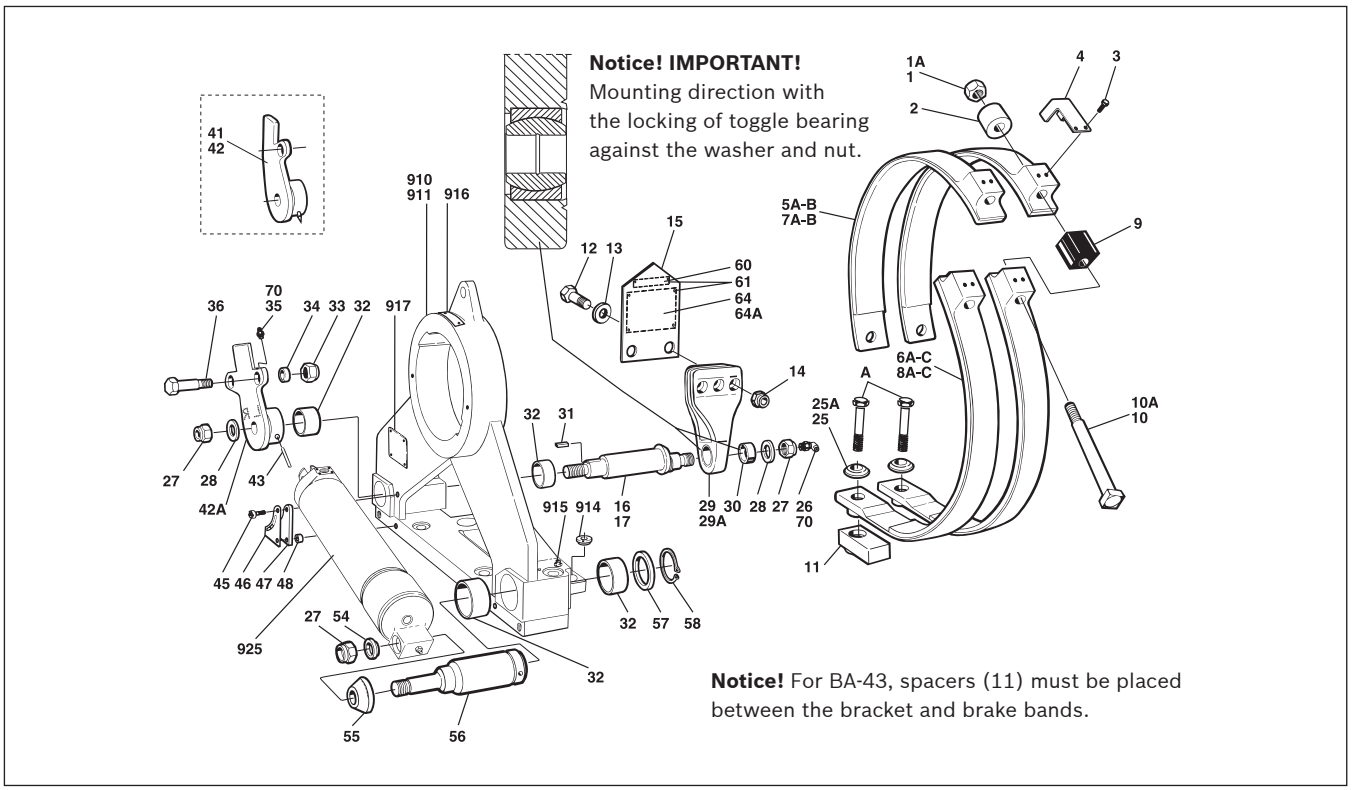

Fig. 49: Clockwise braking force direction

1. Mount the bushings (32) on the bracket (910 or 911), using eccentric shaft (16 or 17) as a tool. Grease the bushings with Texaco Multifak EP2 or an equivalent grease without solid additives. Also fill the space between the bushings with grease.
2. Mount the rear shaft (56), spacer (57) and circlip (58). Grease the shaft prior to fitting: See paragraph 1 above.
3. Locate sleeve (55) on the rear shaft. Mount the rear bracket of the brake cylinder (925), washer (54) and nut (27).
4. Press bushing (34) into lever (41 or 42).

Notice! Make sure that the lubrication holes coincide. Insert the grease nipple (35), and protection cap (70).

---

5. Grease eccentric shaft (16 or 17) – see paragraph 1 – and insert it. Mount key (31), lever (41 or 42) washer (28) and nut (27).
6. Mount the brake cylinder piston rod on the lever (41 or 42). Assemble screw (36) and nut (33).
7. Mount link head (29), washer (28) and nut (27). Insert grease nipple (26), and protection cap (70).
8. Mount the motor, see 3.1.5 “Motor – front bracket on series 44 and 64”.
9. Mount the lower brake bands (6 or 8). Lubricate the journals in accordance with paragraph 1. Assemble washers (25) and screws (A). If the screws can not be tightened with a torque wrench, tighten until the washers (25) are flat.

10. Mount the upper brake bands (5 or 7). Place screws (12), washer (13), pointer (15) and nuts (14). Lubricate the screws prior to fitting – see paragraph 1.

Notice! The brake bands must be movable in relation to the link head. For this reason, do not tighten the screws so much as to squeeze link head (29) together.

---

11. Mount the bands together with adjusting screws (10), spacers (9 and 2) and nuts (1). Prior to mounting, grease adjusting screws (10) with Molykote G or an equivalent.
12. Fix scale (46), support plate (47) and spacers (48) with screws (45).
13. Rivet the brake adjustment sign (64), and the braking force direction plate (917).
14. Before starting up, adjust the brake assembly. See brake adjustment for BA-43 and BA-63, single acting.
15. Place nut locks (4) and screws (3).
16. Check that the brake assembly is installed so that the correct braking force direction is obtained, and that the signs (60 and 917) corresponds with the installed brake assembly.

Screws (A)	Strength class (ISO 898/1)	Tightening torque*	
		Nm	lbf·ft
M24	10.9	960	710
1” UNC	10.9	1 100	810

*Lubricate with oil

Installation of brake assembly BA-43, BA-63 double acting and brake cylinder BCI-M

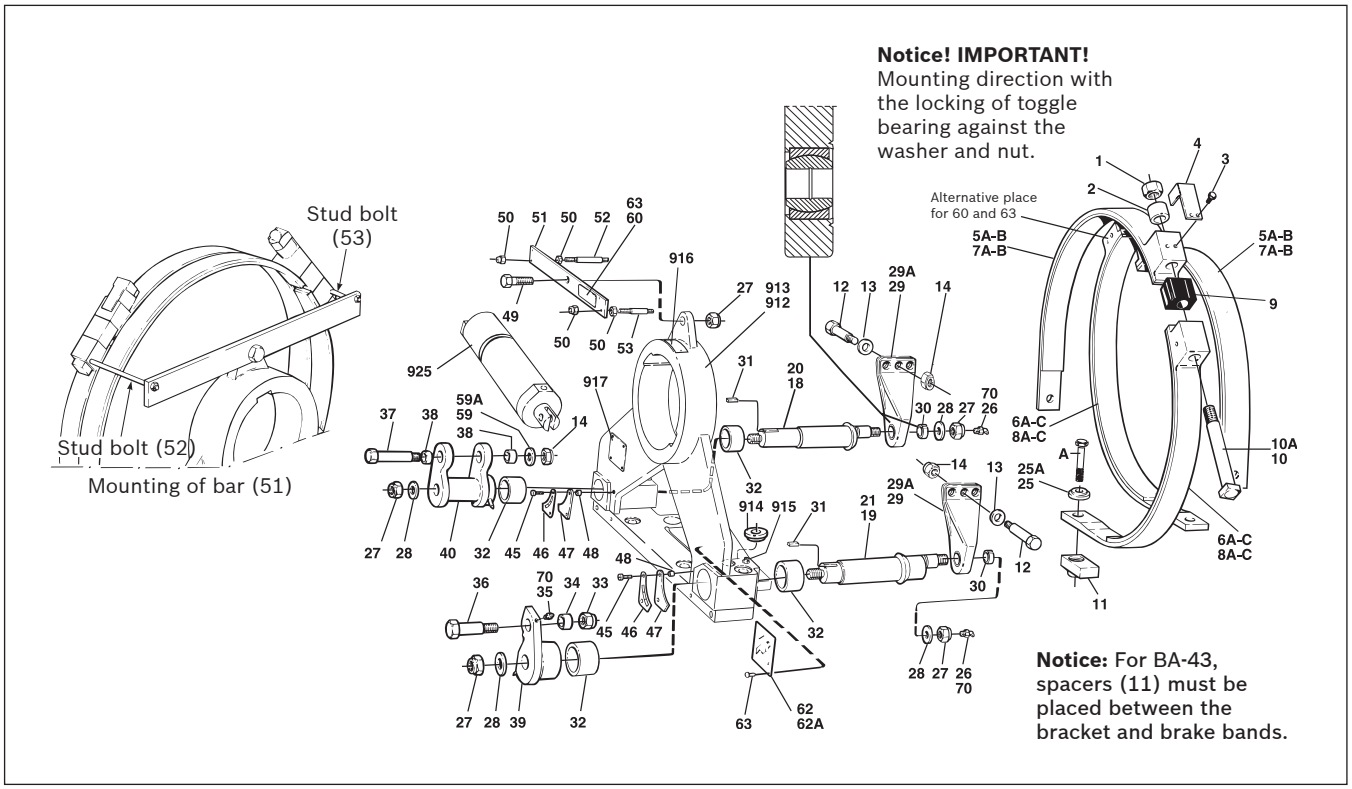

Fig. 50:

1. Mount bushings (32) on the bracket (912 or 913), using eccentric shaft (18 or 20 and 19 or 21) as tools. Grease the bushings with Texaco Multifak EP2 or an equivalent grease without solid additives. Also fill the space between the bushings with grease.
2. Grease and mount the eccentric shafts (18 or 20 and 19 or 21). See paragraph 1 above.
3. Press bushings (34 and 38) into levers (39 and 40).

Notice! Make sure that the lubricating holes on lever (39) coincide. Insert the grease nipple (35), and protection cap (70).

---

4. Fix keys (31) and mount levers (39 and 40) on the eccentric shaft. Mount washers (28) and nuts (27).
5. Mount the brake cylinder (925) piston rod on lever (39). Mount fitting bolt (36) and nut(33).
6. Centre the brake cylinder bracket against rear brake lever (40). Mount fitting bolt (37), washer (59) and nut (14).

Notice! Do not tighten the nut so hard that the brake cylinder and lever can not move freely against each other.

---

7. Mount link heads (29), washers (28) and nuts (27). Insert grease nipples (26), and protection cap (70).
8. Mount the motor, see 3.1.5 “Motor – front bracket, mounting of front bracket on series 44 and 64”.
9. Mount the lower brake bands (6 or 8). Lubricate the journals in accordance with paragraph 1. Assemble washers (25) and screws (A). If the screws can not be tightened with a torque wrench, tighten until the washers (25) are flat.
10. Mount the upper brake bands (5 or 7). Lubricate and mount the screws (12). See paragraph 1. Mount also the washers (13) and nuts (14).

Notice! The brake bands must be movable in relation to the link heads. For this reason, do not tighten the screws so much as to squeeze link heads (29) together.

---

11. Mount the bands together with adjusting screws (10), spacers (9 and 2) and nuts (1). Prior to mounting, grease adjusting screws (10) with Molykote G or an equivalent.
12. Fix scale (46), support plate (47) and spacers (48) with screws (45).
13. Rivet the brake adjustment sign (62), and the brake direction plate (917).
14. Drill and tap M8 holes in the journals on the brake bands as shown in the fig. Mount stud bolts (52 and 53), nuts (50), bar (51) and nuts (50). Mount screw (49) and nut (27).
15. Before starting up, adjust the brake assembly. See brake adjustment for BA-43 and BA-63, double acting.
16. Assemble nut locks (4) and screws (3).
17. Check that the brake assembly is installed so that double acting brake direction is obtained, and that the signs (60 and 917) corresponds with the installed brake assembly.

Screws (A)	Strength class (ISO 898/1)	Tightening torque*	
		Nm	lbf·ft
M24	10.9	960	710
1” UNC	10.9	1 100	810
*Lubricate with oil			

Installation of brake assembly BA-85 single + double acting and brake cylinder BCI-M

Notice! IMPORTANT!
Mounting direction with the locking of toggle bearing against the washer and nut.

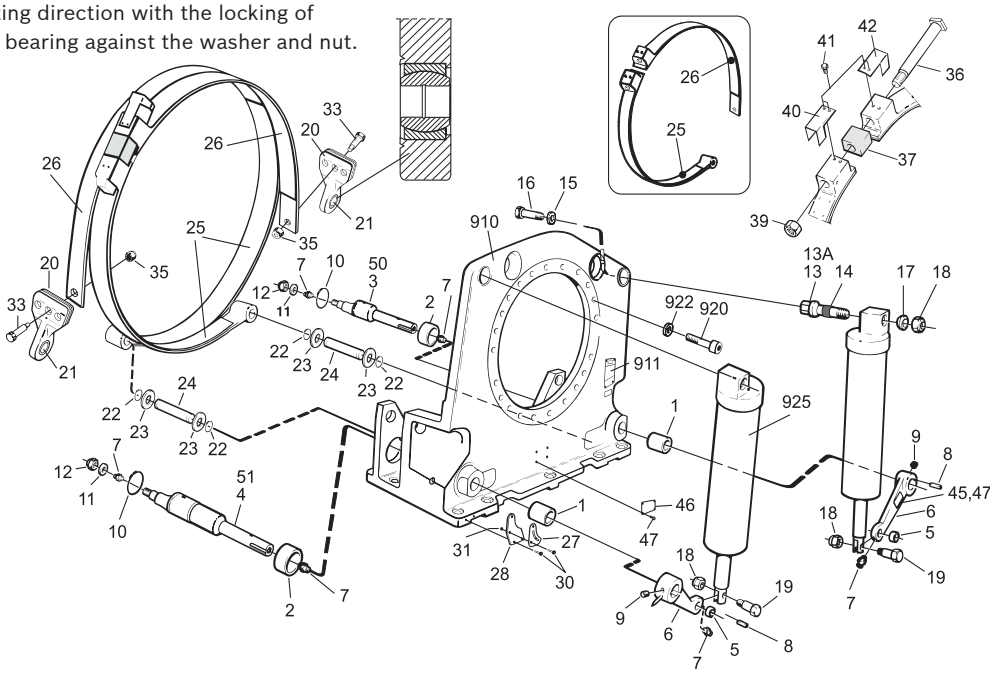

Fig. 51: Double-acting braking force direction

1. Grease the bushings (1) with Texaco Multifak EP2 or an equivalent grease without solid additives and mount them on the bracket (910).
2. Grease the eccentric shaft – see paragraph 1. Mount the bushings (2) and eccentric shafts (3 or 50 and 4 or 51).
3. Press bushings (5) into levers (6).

Notice! Make sure that the lubricating holes coincide. Insert the grease nipple (7).

4. Mount levers (6) and mount keys (8). See fig. 1, 2 or 3 for position of keys for respective braking direction. Mount locking screws (9).
5. Mount lock rings (10) on the eccentric shafts. Insert the grease nipples 7.
6. Mount holding bolts (13), spring washers (15) and screws (16). Tightening torque: 750 Nm (553 lbf·ft).

Notice! The spanner slots on holding bolt (13) must be mounted flush with the brake cylinder centre line.

7. Grease holding bolts (13) in accordance with paragraph 1, and mount the brake cylinder (925) on them. Mount washers (17) and nuts (18). Tightening torque 100 Nm (73 lbf·ft).

Notice! After tightening nuts (18), make sure that the brake cylinders are movable on holding bolts (13).
Fit the piston rod ends on levers (6). Mount fitting bolts (19) and nuts (18).
Tightening torque: 40 Nm (29 lbf·ft).

---

8. Mount link heads (20) on eccentric shafts.
9. Mount the motor, see 3.1.5.
10. Mount brake bands (25). Lubricate the hole in the brake bands end with Molykote G.
11. Lubricate shafts (24) with Molykote G. Mount the brake bands (25) with shafts (24) and washers (23). Secure with lock rings (22). See fig. 1, 2 or 3 for the location of the shafts for respective braking direction.

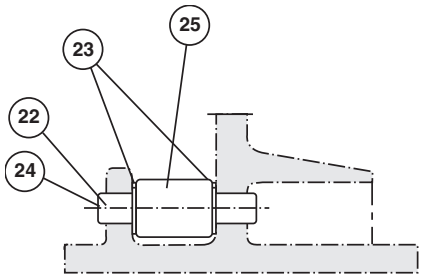

Fig. 52:

12. Mount brake bands (26). Mount screw (33) and nuts (35). Lubricate the screws prior to mounting - see paragraph 1.

Notice! The break bands must be movable in relation to the link heads. For this reason, do not tighten the screws so much as to squeeze link heads together. Mount the bands together with adjusting screws (36), spacers (37) and nuts (39). Prior to mounting, grease adjusting screws (36) with Molykote G or equivalent.

---

13. Rivet the brake adjustment sign (46) and mark the braking force direction plate (911) in acc. with installed brake assembly.
14. Fix scales (27), support plates (28), screws (30) and nuts (31).
15. Before starting up, adjust the brake assembly. See brake adjustment for BA-85.
16. Assemble nut locks (40 and 42) and screws (41).
17. Check that the brake assembly is installed so that the correct braking force direction is obtained, and the signs (45 and 911) corresponds with the installed brake assembly.

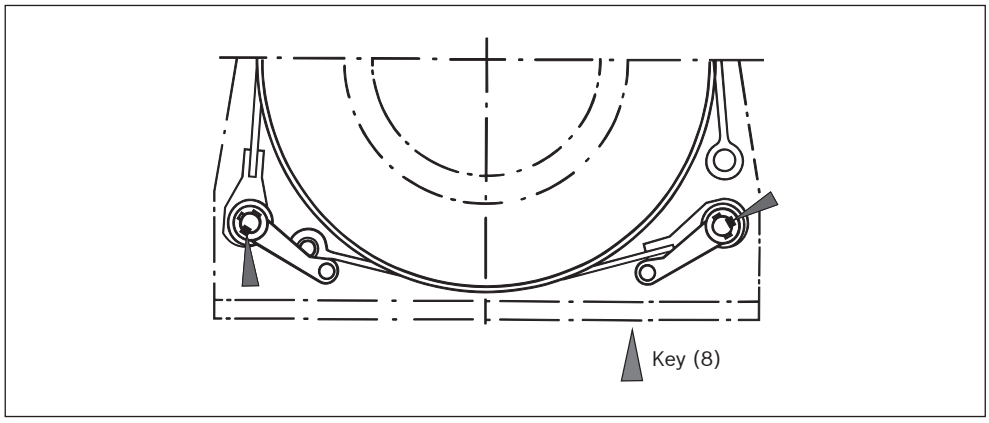

Fig. 53: Clockwise, (R.H.) brake

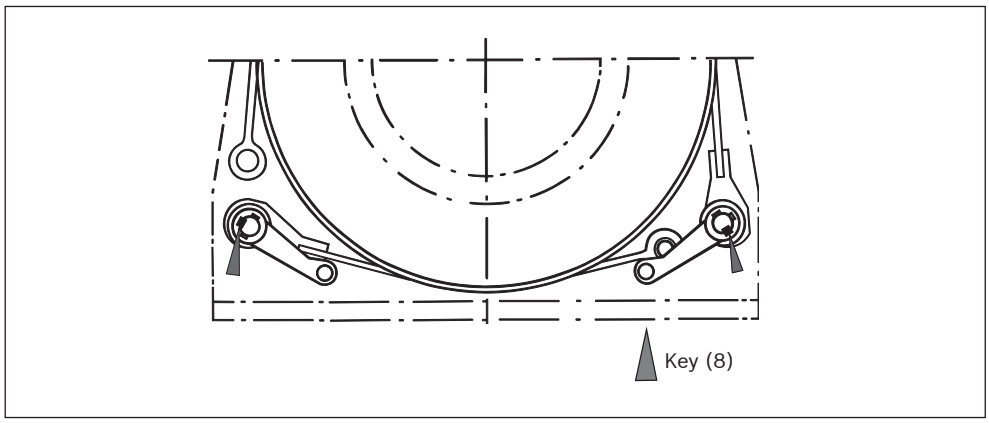

Fig. 54: Counter clockwise, (L.H.) brake

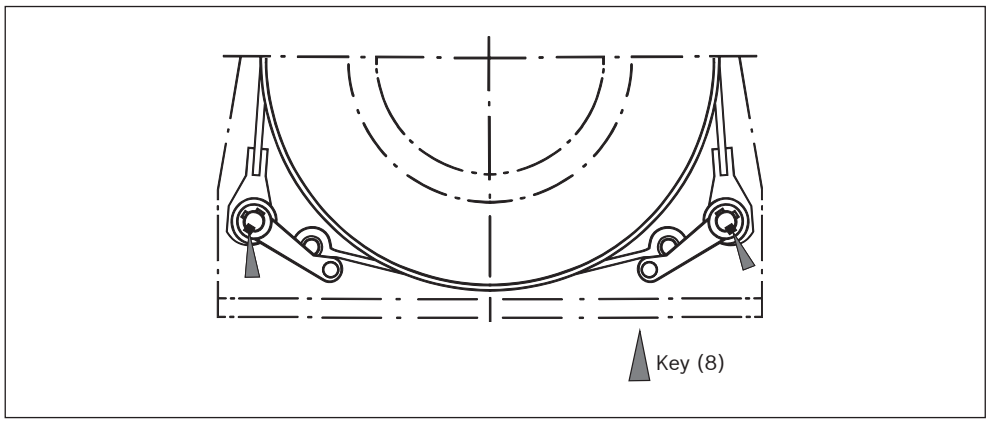

Fig. 55: Double acting

3.2 Oil connections

1.1.4 Oil connections, motor without valve, series 44 and 64

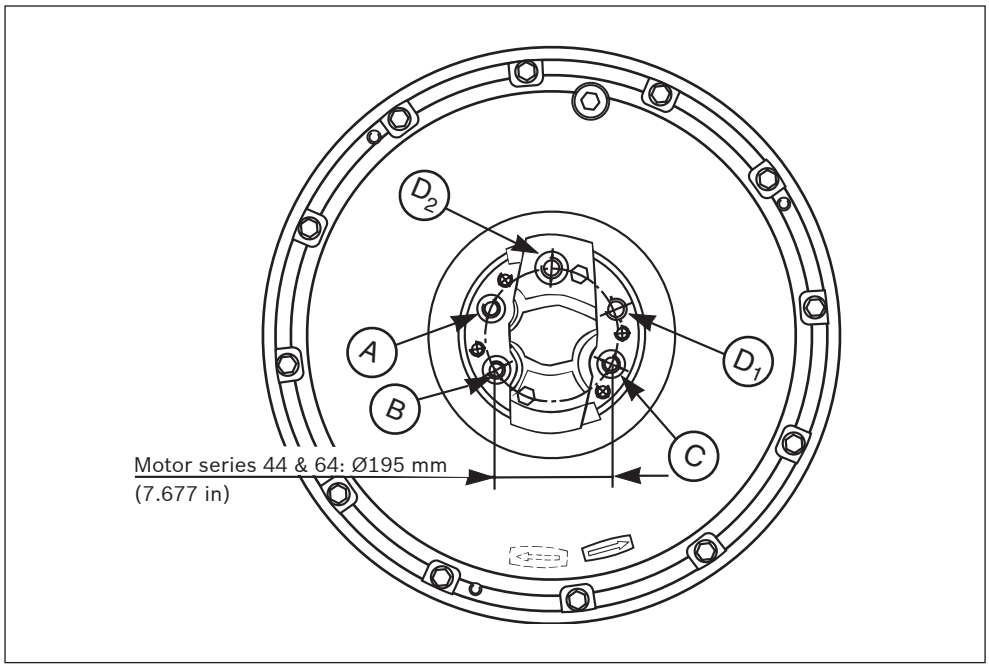

Fig. 56: Double acting

Port	Description	Dimension	Remarks
A	Main connection	BSP 1 1/4”	If A is used as inlet, the motor rotates in direction of the arrow
B	Main connection	BSP 1 1/4”	Normally plugged
C	Main connection	BSP 1 1/4”	If C is used as inlet, the motor rotates in opposite direction of the arrow
D_1	Drain connection	BSP 3/4	
D_2	Flushing connection	BSP 3/4	Used for flushing of the motor case

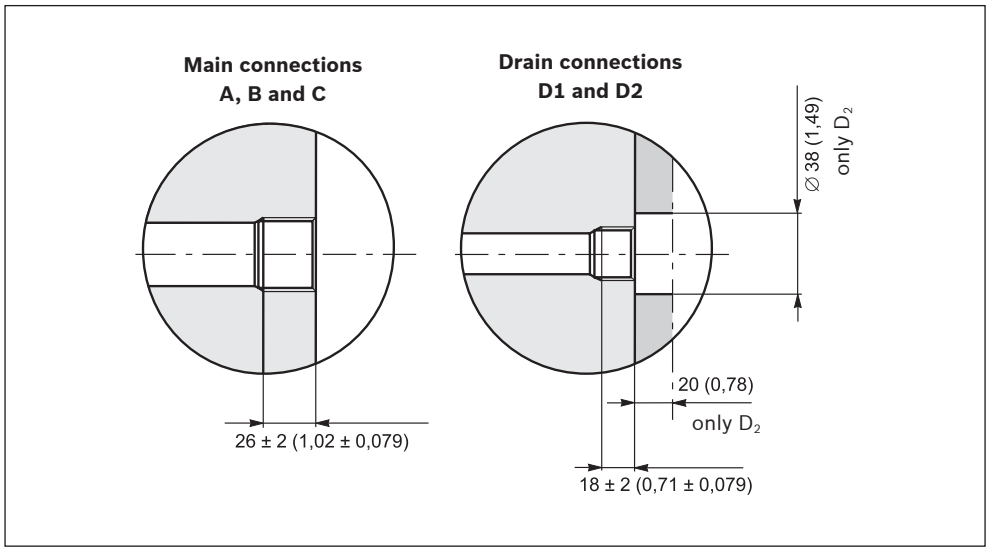

Fig. 57: Double acting

⚠ CAUTION

Check direction of rotation

1.1.5 Oil connections, motor series 84

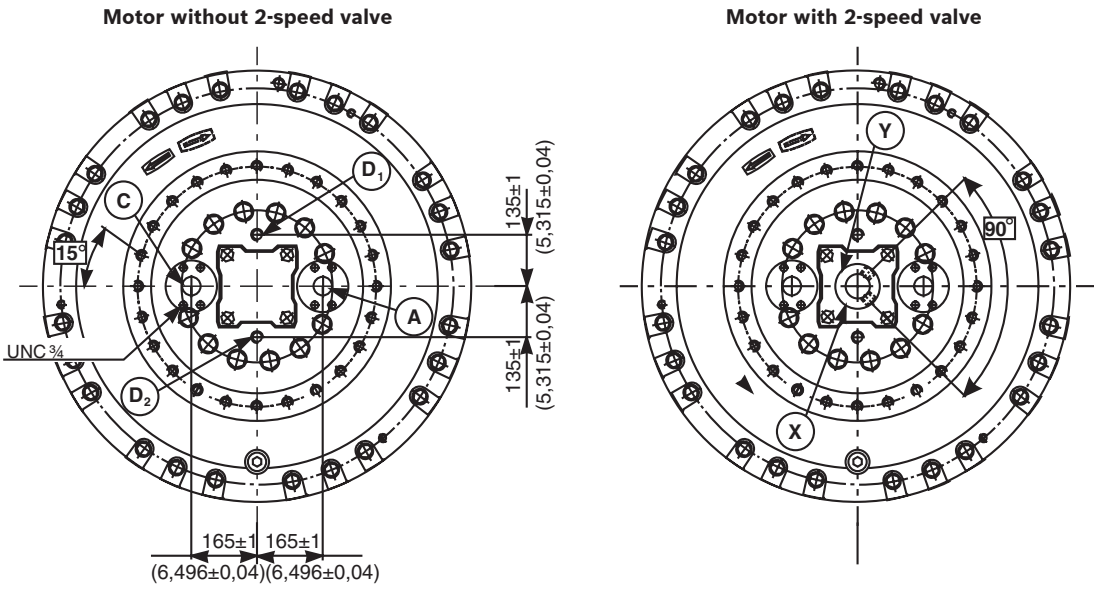

Fig. 58:

Port	Description	Dimension	Remarks
A*	Main connection	SAE 2”	If A is used as inlet, the motor rotates in direction of the arrow.
C*	Main connection	SAE 2”	If C is used as inlet, the motor rotates in opposite direction of the arrow.
D1	Drain connection	BSP 1”	
D2	Flushing connection	BSP 1”	Used for flushing the motor case
Y**	Pilot pressure conn.	BSP 3/4	Displacement 57.9 cm3 (5.35 in3), 2-position valve Displacement 90.5 cm3 (5.52 in3), 3-position valve Gives half displacement
X**	Pilot pressure conn.	BSP 3/4	Only with 3-position valve, displacement 32.6 cm3 (1.99 in3) Gives full displacement

* SAE-flange J518 C, code 62, 414 bar (6000 psi)

** The required pilot pressure at connection Y and X, to ensure rapid and secure switching is 8 bar (116 psi). Max. permitted pilot pressure at Y and X is 50 bar (725 psi). The built in shock valves are set at 350 bar (5100 psi) for motor 84-22300. For motors 84-25100, 84-33800 and 38000 the setting is 300 bar (4320 psi).

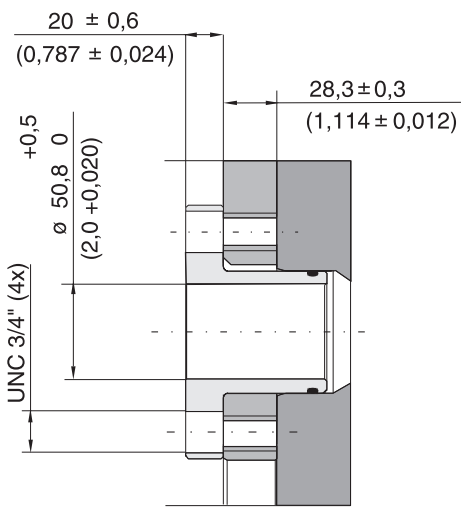

Fig. 59: Main connections A and C

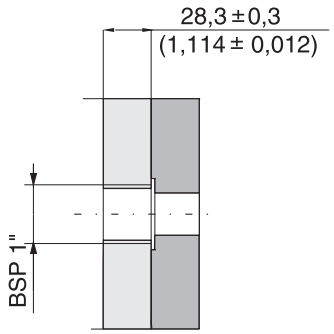

Fig. 60: Drain connections D_1 and D_2

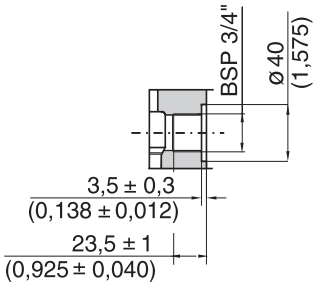

Fig. 61: Pilot pressure connections X and Y

⚠ CAUTION

Check direction of rotation

3.2.1 Oil connections, V46-C

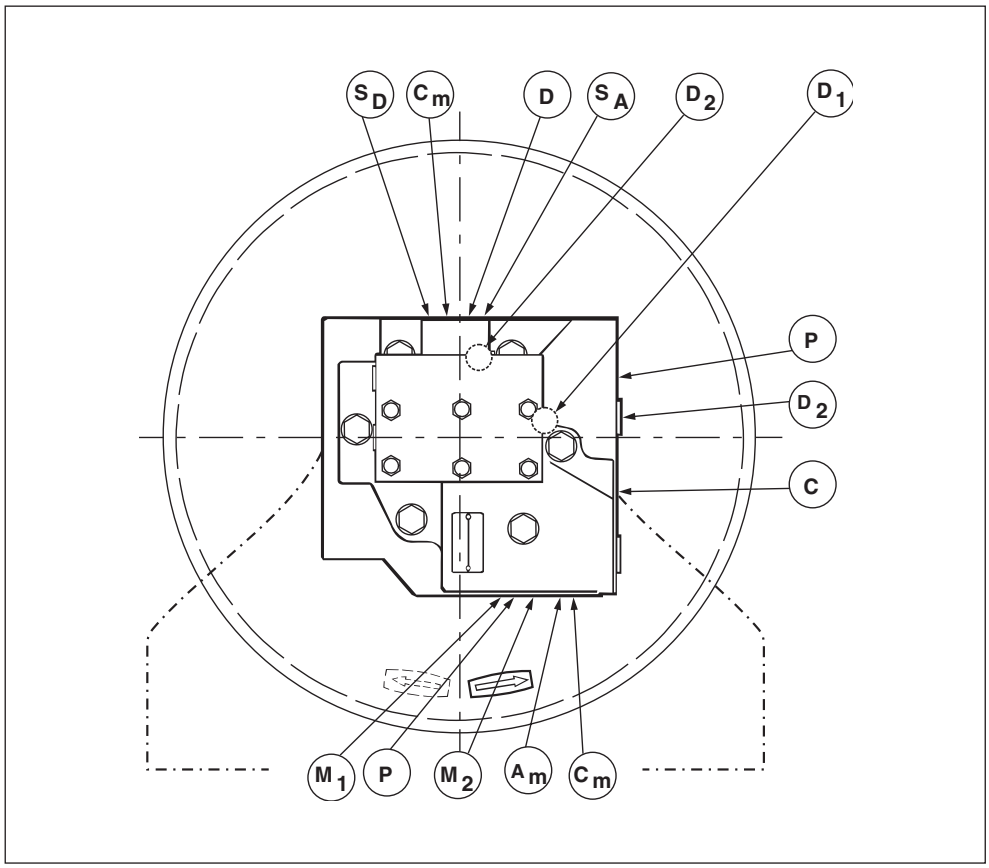

Fig. 62:

Port	Description	Dimension	Remarks
P*	Main connection	1 1/2”	If P is used as inlet, motor rotates in direction of the arrow
C*	Main connection	1 1/2”	If C is used as inlet, the motor rotates in opposite direction of the arrow
D	Drain connection	BSP 3/4”	
M_1	Charge pressure conn.	BSP 3/4”	
M_2	Charge pressure conn.	BSP 3/4”	Plugged, used as additional charging port
S_D	Pilot pressure conn.	BSP 1/2”	Plugged
S_A	Pilot pressure conn.	BSP 1/2”	12 bar (170 psi). 6 bar (85 psi) for valve operating at no flow
P	Pressure point conn.	BSP 1/2”	
A_m, C_m	Pressure point conn.	BSP 3/4”	
C_m	Pressure point conn.	BSP 1/2”	
D_2	Ext. flushing conn.	BSP 3/4”	Note: Not marked on valve

* SAE-connection J518 C, code 62, 414 bar (6000 psi).

3.2.2 Oil connections, V46-O

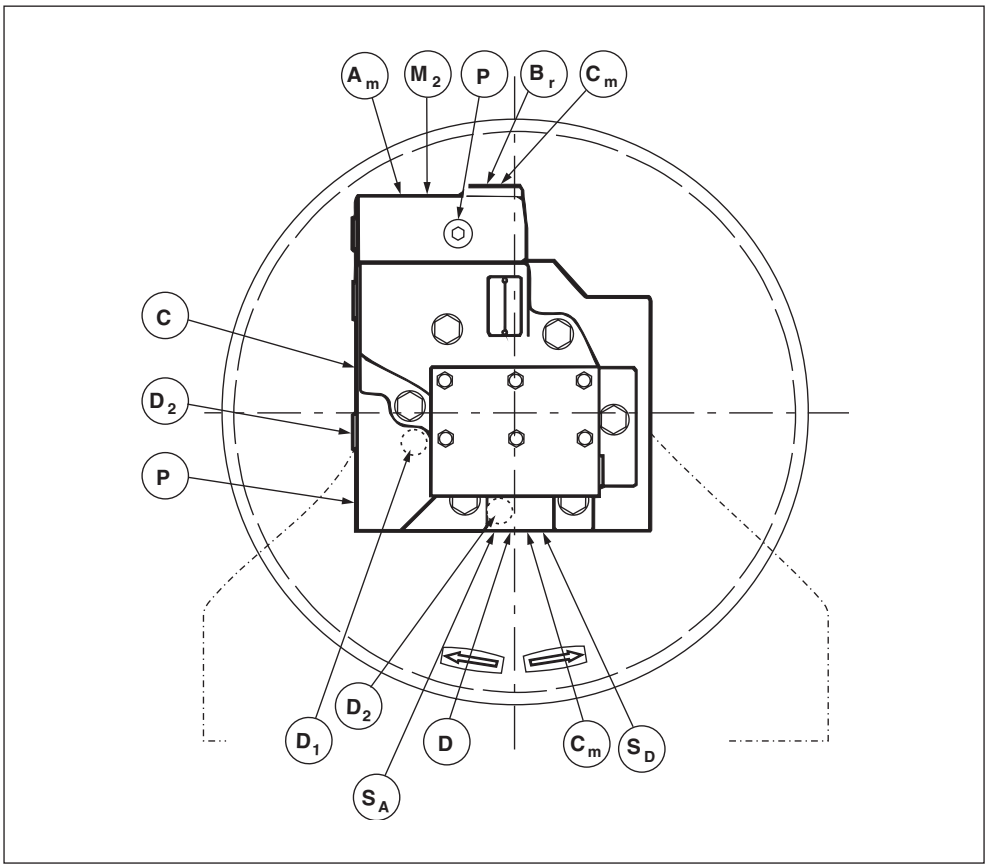

Fig. 63:

Port	Description	Dimension	Remarks
P*	Main connection	1 1/2”	
C*	Main connection	1 1/2”	
D	Drain connection	BSP 3/4”	
M_2	Charge pressure conn.	BSP 3/8”	
S_D	Pilot pressure conn.	BSP 1/2”	Displacement shifting connection
S_A	Pilot pressure conn.	BSP 1/2”	External pilot connection for counter-balance spool
P, C_m	Pressure point conn.	BSP 1/2”	
A, C_m	Pressure point conn.	BSP 3/4”	
B_r	Brake line connection	BSP 3/8”	
D_2	Ext. flushing conn.	BSP 3/4”	Note: Not marked on valve

* SAE-connection J518 C, code 62, 414 bar (6000 psi).

3.3 Reversal of rotation

The direction of rotation of the motor can be changed in two ways:

1. Oil supply is changed from “A” (P) connection to “C”. The motor then rotates in the opposite direction.
2. The position of the distributor is altered in relation to the cam ring (motor case). The alteration is achieved by moving the position of the distributor to an alternative key slot. The key slots are on the distributor of the motors except for 84-14800, 84-25100 and 84-38000 which only have one slot on the distributor.

The distributor must be fitted so that the punched letter “R” for right hand rotation or “L” for left hand rotation, aligns with the zero “0” on the cam ring beneath the plug in the front end cover. See the figure below for the respective motor series.

See specific service instructions for more accurate adjustment of the distributor. On 44- and 64-series motors, the distributor is turned 90°. For type 84-25100, 84-14800 and 84-38000, the distributor is turned 180° and 67.5° for type 84-22300 and 84-33800. When changing rotation in this manner, it should be noted on the type plate, and by reversing the arrow on the front end cover.

IMPORTANT! When filling and removing the distributor, take care that no damage occurs. Check that it fits to the same depth as before removal.

⚠ CAUTION

Check direction of rotation

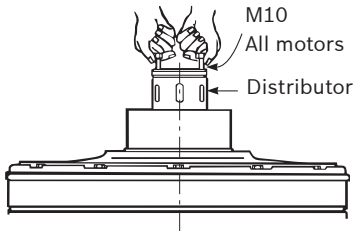

Fig. 64:

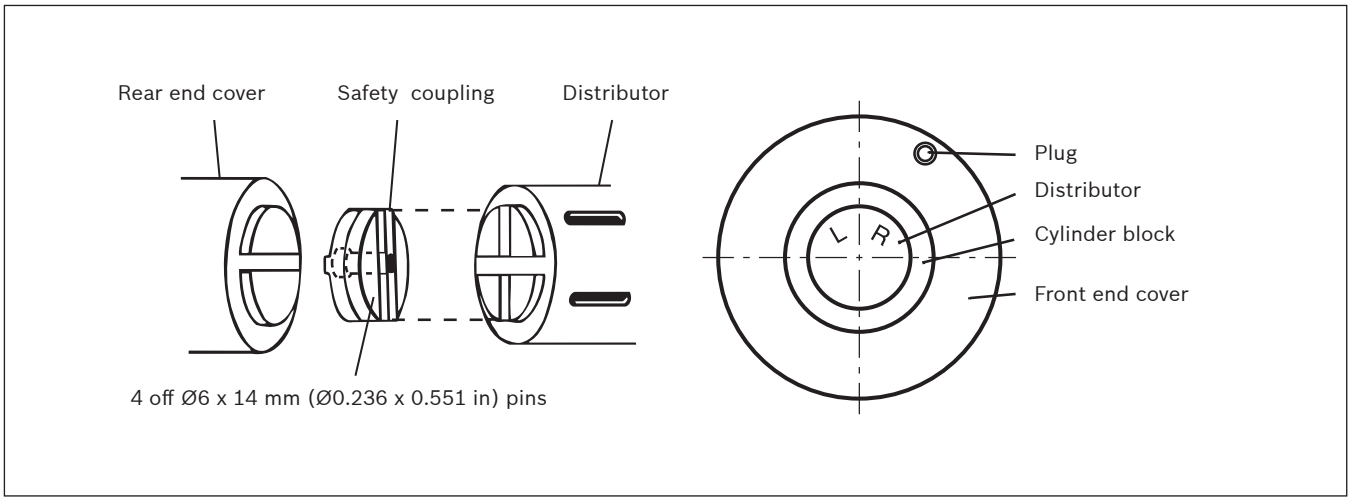

Fig. 65: Series 44-, and 64

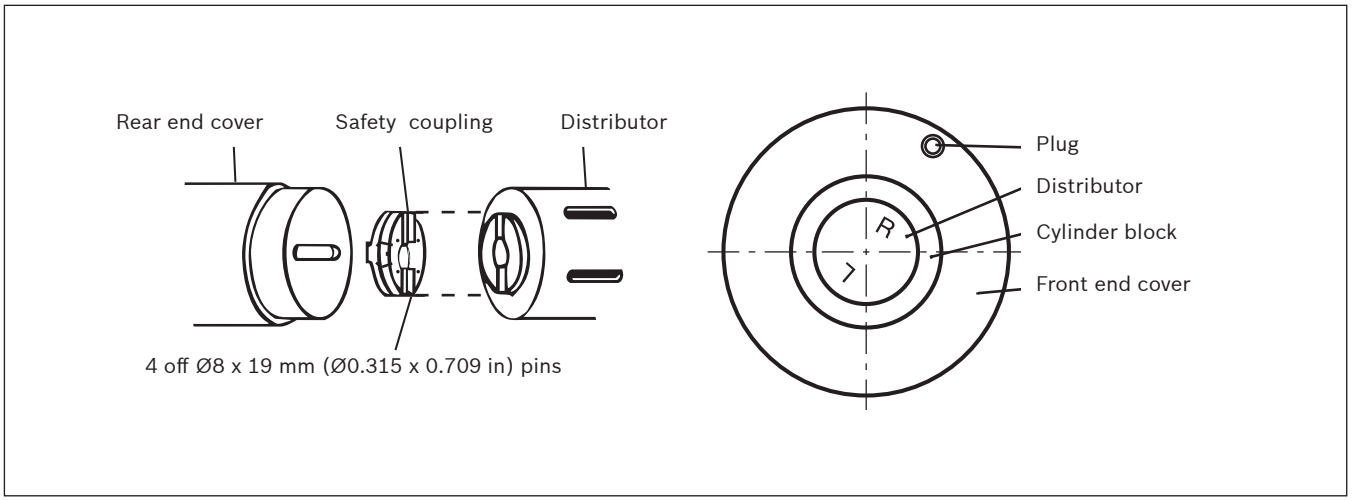

Fig. 66: Type 84-38000, 84-25100 and 84-14800

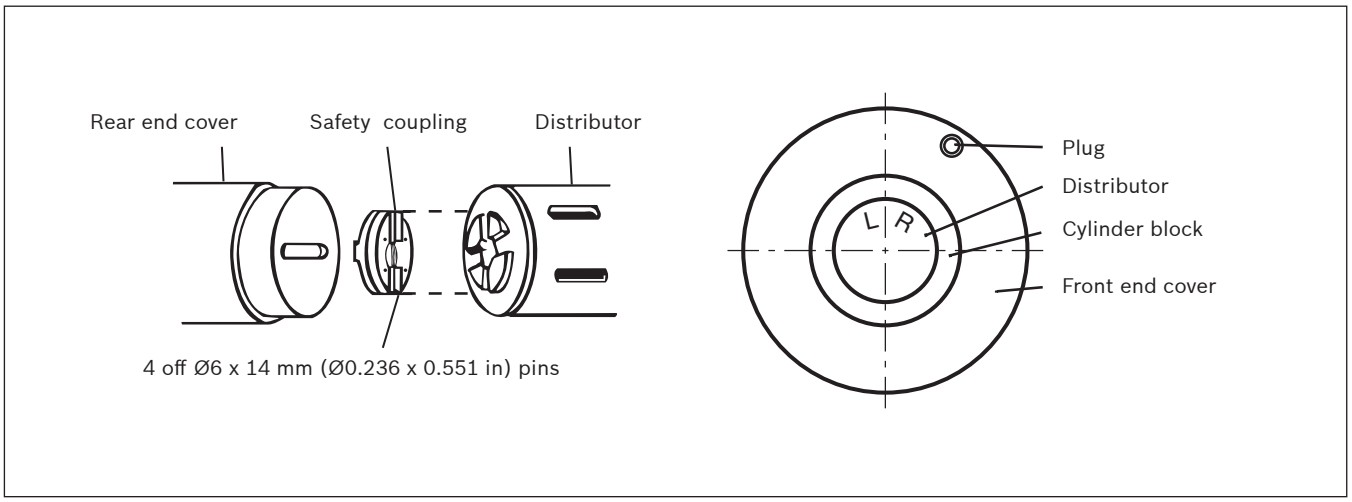

Fig. 67: Type 84-22300 and 84-33800

4 Handling

4.1 Instructions for storage

At delivery, the motor has been protected internally with an oil film and externally with an anticorrosion film which is sufficient protection for indoor storage in a temperature location for up to approximately 12 months.

IMPORTANT! The anti-corrosion protection must be complemented after transport and handling.

If the motor is to be stored for more than 3 months in a not temperate location and 12 months in a tempered location, it must be filled with oil and placed with the cylinder block upwards. See 2.3, “Choice of hydraulic fluid”.

Fill the motor with filtered oil in the following order, see figure below: “1”, “D1”, “C” and “A”.
Take great care that impurities do not get inside the motor with the oil. Plug the connections so that their threads are protected and no impurities can enter the motor. Check that all plugs are properly tightened. Motors which are kept in storage must be regularly rotated (once a month) a few turns to maintain an oil film over all internal parts of the motor.
Quantity of oil required to fill respective motor types:

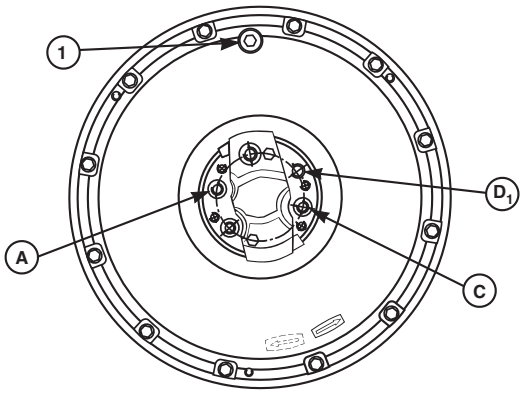

Fig. 68:

Series	Volume	
	Litres	US gallon
44	35	9.2
64	40	10.6
84	80	21.1

4.2 Before commissioning

Fill the motor with filtered oil in the following order, see figure below: “1”, “D1”, “C” and “A”. The following must be checked, depending upon the motor type, before starting up:

1. Check that the motor is connected for correct rotation (see 3.2 “Oil connections” and 3.3 “Reversal of rotation”).
2. Choose the type of hydraulic fluid which matches the oil recommendations (see 2.2 “ Choice of hydraulic fluid”).
3. Fill the motor housing with hydraulic fluid at least to the level of the shaft centre (see 3.1 “Mounting instruction”).

⚠ CAUTION

4. Check the drainage line for any restrictions which might cause overpressure in the motor case (see 3.1 “Mounting instruction”).

5. Check that the motor is protected against overloading (see 1.2 “Motor data”).
6. Check that the charge pressure corresponds with the charge pressure graph (see 2.1 “Recommended pressure”).

4.3 Commissioning

During the start up period, a hydraulic installation must be checked regularly and thoroughly at frequent intervals. Working pressure and charge pressure must be checked, and correspond, with calculated values.

44-, 64- and 84-series

- Pressure in the drain line, measured at the motor, should be less than 3 bar/43.5 psi (for 1 % of the operation time evenly divided, pressure peaks of max. 5 seconds up to 8 bar/116 psi are allowed).
- For motors with silicon rubber main seals, these values must be reduced 50 %.
- These pressure limitations are important for the service life of the motor.
- If leakage occurs, repair the fault and then carry out measurements.
- Check all lines, connections, flanges, bolts, etc. Tighten if necessary.
- Check other possible leakage points and replace any faulty parts.
- Change dirty hydraulic fluid immediately.
- Control that rotating parts can not cause damage.

Flushing of motor case

To avoid high temperature in the motor case, the heat must be cooled away because high temperature gives lower viscosity and that gives reduction in service life. Low viscosity also gives reduced permitted output power from the motor.
For continuous duty in applications with an ambient temperature of +20°C (+68°F), the motor case must be flushed when the output power exceeds following values:

Max. power without flushing

VI 44- and 64-series	120 kW	161 hp
VI 84-series	140 kW	188 hp

For calculation of required flushing, please contact a Hägglunds representative.

4.4 Periodic maintenance

After that a hydraulic system has been in operation for some time, it should undergo periodic maintenance and inspection at intervals which are dependant upon the equipment and type of operation. This periodic maintenance should cover the following:

- Check the hydraulic system for leaks. Tighten bolts, change faulty seals and gaskets, and if necessary clean the system.
- Inspect and clean all air, oil and magnetic filters. Change dirty filter meshes, inspect and if necessary clean the tank, pump, filter etc.
- Repair or change defective or worn parts.
- Check the pressure and temperature of the hydraulic fluid and perform other routine inspections. If necessary adjust valves etc.
- Check that the hydraulic fluid has not aged.
- Check that no dirt or other impurities has got into the system during inspection. If the hydraulic motor in a system is kept clean, leaks and defects will be detected earlier.

We recommend that an operational journal is kept and that planned inspection is carried out at predetermined times. Controls and measures are carried out as follows:

Motor

The motor must be protected against internal rusting if it is not used for a longer period, approx. 1 month, this can be done in several ways:

1. Mix rust preventive additive with the hydraulic fluid e.g. use 5% Rust Veto Concentrate (manufacturer: E.F. Houghton & Co., Philadelphia, USA). This additive can be used continuously, and should protect for up to 1 year. (After which time the motor must be run).
2. Without additive, the motor must be run a few turns regularly, by starting the hydraulic system.
3. If it is not possible to run the motor, plug all connections. Open the plug BSP 1 1/4” on the front end cover and fill the motor with oil (see fig. on next page).

Filter

The first service should be carried out after 1 month or 100 hours of operation, after which checks should be made every 6 months or 500 operating hours.

Oil

The oil loses its viscosity after a certain amount of time, which reduces the lubrication effect. High temperature and pressure always reduces the life length of the oil.

- After 6 months or 4000 running hours (whichever comes first) the oil should be analysed.
- Clean the hydraulic oil tank every year.
- Change oil as soon as it is necessary.
- Check that the tank is clean each time you change oil.

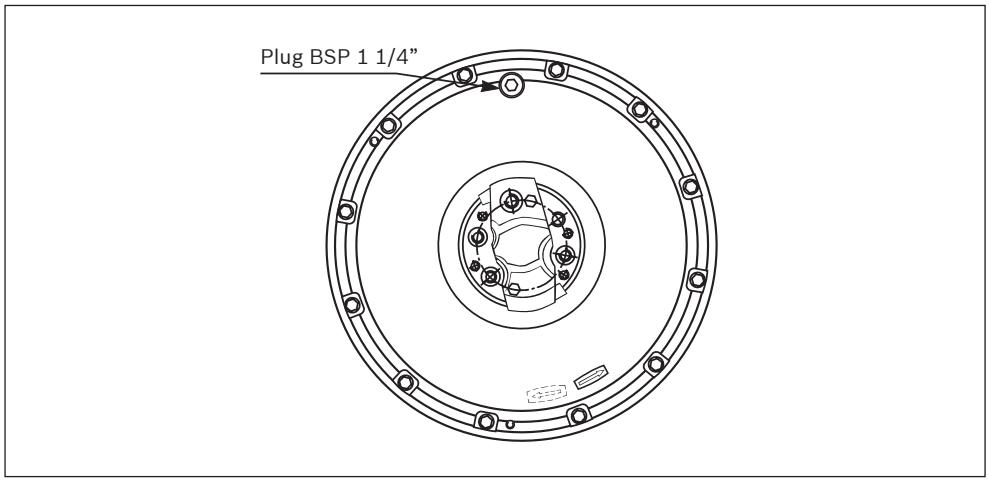

Fig. 69:

Torque arm

If the torque arm with pivoted design is exposed to a corrosive atmosphere it should be lubricated once a month.

⚠ CAUTION

Do not weld, drill, grind or carry out any similar work on the torque arm without Hägglunds approval.

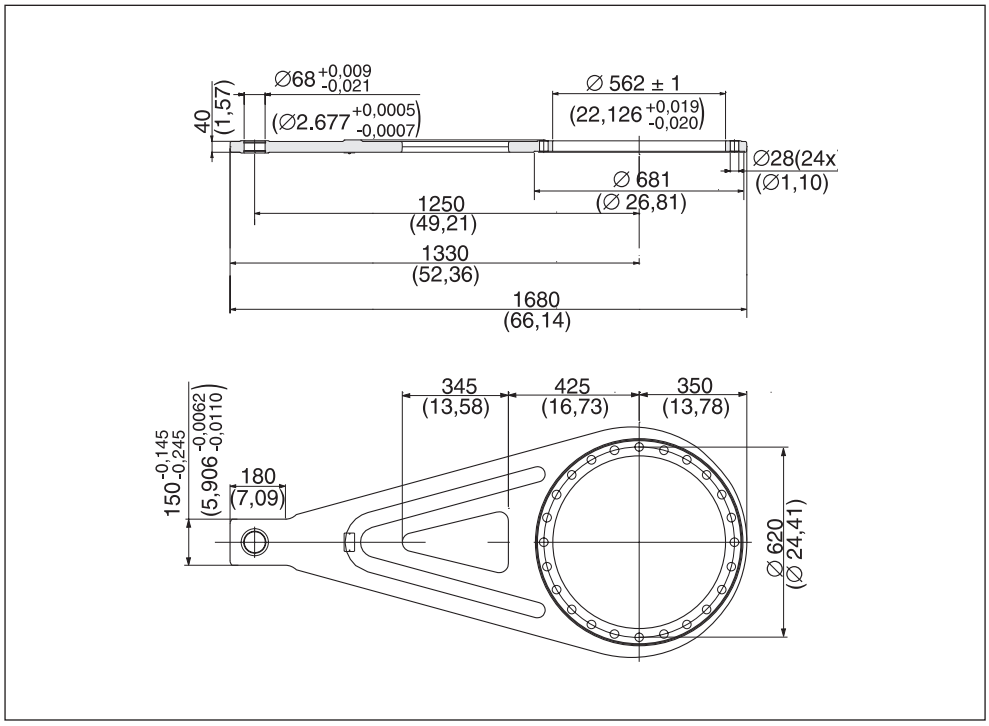

Fig. 70: TAC 1250-B

Brake equipment

If the brake equipment is exposed to a corrosive atmosphere e.g.: On a ship deck, it should be lubricated once per month.

⚠ WARNING

Check that the brake linings are free from oil and dirt.

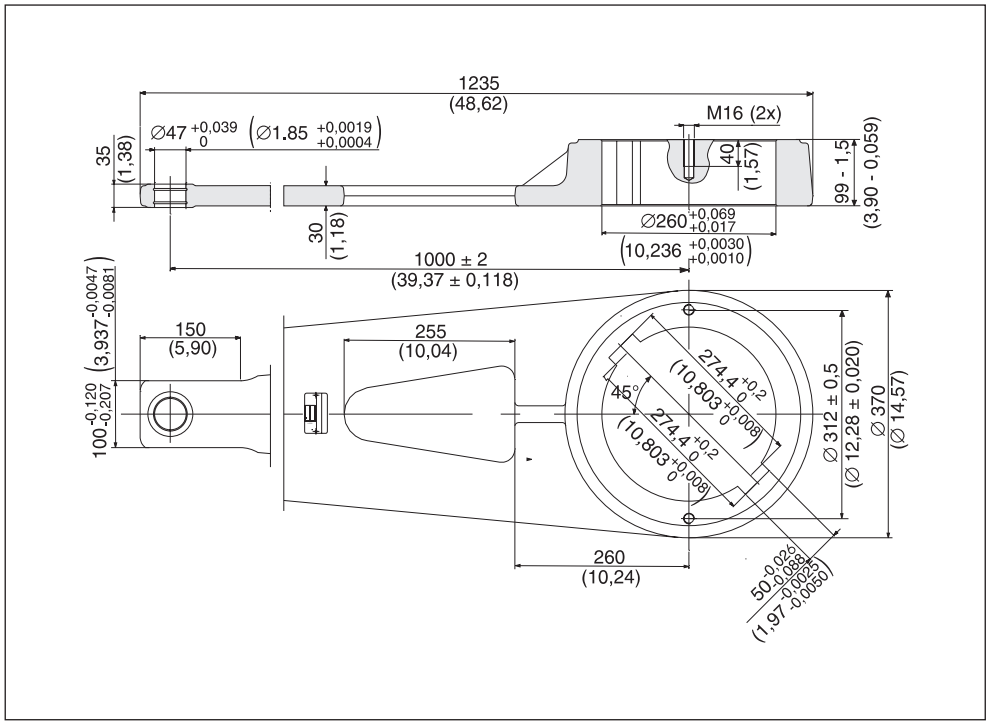

Fig. 71: TAC 1000-K

Maintenance chart

Series	After 1 month or 100 hours	After 3 months or 500 hours	Every 6 months	Every 12 months
Oil filter	Rpl	Rpl	Rpl	–
Oil	–	–	Insp	–
Brake equipment	Insp*	Insp	Insp	–
Torque arm	Insp*	–	Insp	–

Rpl=Replacement Insp=Inspection

*If it is exposed to a corrosive atmosphere, equipment shall be lubricated once per month.

4.4.1 Cleaning and care

⚠ CAUTION

Aggressive detergents may damage the seals on the hydraulic motor and cause them to age faster.

- ▶ • Never use solvents or aggressive detergents.
- ▶ • If in doubt, check the compatibility of the detergent with the seal type
- ▶ (Nitrile or Viton) specified in the hydraulic motor.

⚠ CAUTION

Using a high-pressure cleaner could damage the speed encoder and the seals of the hydraulic motor.

- ▶ • Do not point the high-pressure cleaner at sensitive components, e. g. shaft seal, seals in general, electrical connections and speed encoder.
- ▶ For cleaning and care of the hydraulic motor, observe the following:
- ▶ • Plug all openings with suitable protective caps/devices.
- ▶ • Check whether all plugs and plug seals are securely seated to ensure that no moisture can penetrate into the hydraulic motor during cleaning.
- ▶ • Use only water and, if necessary, a mild detergent to clean the hydraulic motor.
- ▶ • Remove coarse dirt from the outside of the machine and keep sensitive and important components, such as sensors and valve blocks clean.

4.5 Disposing

When the system or a single component is worn out, it should be handled in an environmentally friendly way. In general waste should at first hand be reused or recycled followed by safe disposal.

Careless disposal of the system, its components and the oil can lead to pollution of the environment. Please therefore observe the following:

- Dispose the product/components in accordance with the national regulations in your country and/or your company-internal specifications.
- Dispose the oil according to the current applicable material safety data sheet.

5 Fault finding

Fault	Probable cause	Action
The motor does not operate	Mechanical stop in the system	Check the system pressure. If the pressure has risen to the relief valve setting, remove the load from the drive.
	The motor does not give sufficient torque due to low differential pressure across the motor, compared to the load.	Check pressure level in the system and correct settings of the pressure relief valve if necessary.
	The distributor settings has been changed.	Dismount the safety coupling and distributor. If the coupling halves have been moved in respect to each other, reset them to original position using the indication hole (Ø3 mm /0.118 in). Then fit new pins: CP 6 x 14 mm (0.236 x 0.551 in) for 44- and 64-series. CP 8 x 19 mm (0.315 x 0.709 in) for 84-series by drilling on the same radius as the original pins.
	The motor receives insufficient or no oil.	Check through the hydraulic system. Check the motor for external leakage (”D”-connection).
The motor rotates in the wrong direction	Oil connections transposed.	Reverse connections.
	Distributor wrongly fitted.	Remove the distributor and safely coupling and replace it for correct rotation.
The motor runs erratically	Pressure or flow variations in the hydraulic system.	Investigate the hydraulic system or mechanical transmission
	The distributor settings has been changed.	Dismount the safety coupling and distributor. If the coupling halves have been moved in respect to each other, reset them to original position using the indication hole (Ø3 mm /0.118 in). Then fit new pins: CP 6 x 14 mm (0.236 x 0.551 in) for 44- and 64-series. CP 8 x 19 mm (0.315 x 0.709 in) for 84-series by drilling on the same radius as the original pins.
Noise in the motor	The motor is running at too low charge pressure	Adjust to correct level. See 2.1 ”Recommended charge pressure”.
	The distributor settings has been changed.	Dismount the safety coupling and distributor. If the coupling halves have been moved in respect to each other, reset them to original position using the indication hole (Ø3 mm /0.118 in). Then fit new pins: CP 6 x 14 mm (0.236 x 0.551 in) for 44- and 64-series. CP 8 x 19 mm (0.315 x 0.709 in) for 84-series by drilling on the same radius as the original pins.
	Internal motor fault.	If possible examine the drain oil. Put a magnet in the oil flow and examine any material which attaches to it. Steel particles indicate damage. Note that fine material from the castings may be disposited and does not mean internal damage in the motor.
External oil leaks from the motor	The sealing ring in the front end is worn.	Change the sealing ring.

Hydraulic motor with 2-speed valve V46-C

Fault	Probable cause	Action
The motor only works at one speed	2-speed plug not fitted	Fit 2-speed plug in the bottom of connection ”A” in the motor.
	2-speed valve of two position type fitted – pilot pressure too low.	Suitable pilot pressure – see 3.2.5 for valve V46-C.
	The valve piston has stuck in single-speed position due to impurities in the oil.	Dismount piston and remove impurities.
Motor cannot be run in single or double speed (2-speed valve or three position type)	Pilot pressure too low.	Required pilot pressure: See 3.2.5 for valve V46-C
	The valve piston has stuck in 0-position due to impurities.	Dismount the piston and remove impurities.

Hydraulic motor with counterbalance valve V46-O

Fault	Probable cause	Action
The motor only rotates in one direction	The valve piston has stuck in unloaded position.	Dismount the piston and remove any impurities.
The motor does not supply any back pressure.	The valve piston has stuck in fully open position.	Dismount the piston and remove any impurities.

Hydraulic motor with band brake

Fault	Probable cause	Action
Insufficient braking torque	The brake is poorly adjusted.	Adjust the brake. See the instruction for brake adjustment under 3.1.5 ”Motor – front bracket”.
	The brake cylinder is not drained in the described manner, excessive counter pressure in drainage line.	Remove the cause of the pressure. Concerning the maximum counter pressure, see the section dealing with draining the brake cylinder under 3.1.5 ”Motor – front bracket”.
	The brake band and the brake surface are dirty or greasy.	Dismantle the brake band and sandpaper the surface of the lining. Clean the brake surface on the motor, If necessary, replace the complete brake band.
The motor runs sluggishly when idling	The brake is excessively tensioned. The brake band is applied despite the brake opening.	Relieve the tension. See section dealing with draining the brake cylinder under 3.1.5 ”Motor – front bracket”.
The brake does not open	Insufficient brake opening pressure.	For the required opening pressure, see section dealing with draining the brake cylinder under 3.1.5 ”Motor – front bracket”.
The brake cylinder leaks oil	Seals or piston damage.	Replace the seals / replace the pistons. IMPORTANT / CAUTION! The spring in the brake cylinder is tensioned.

6 Drawings

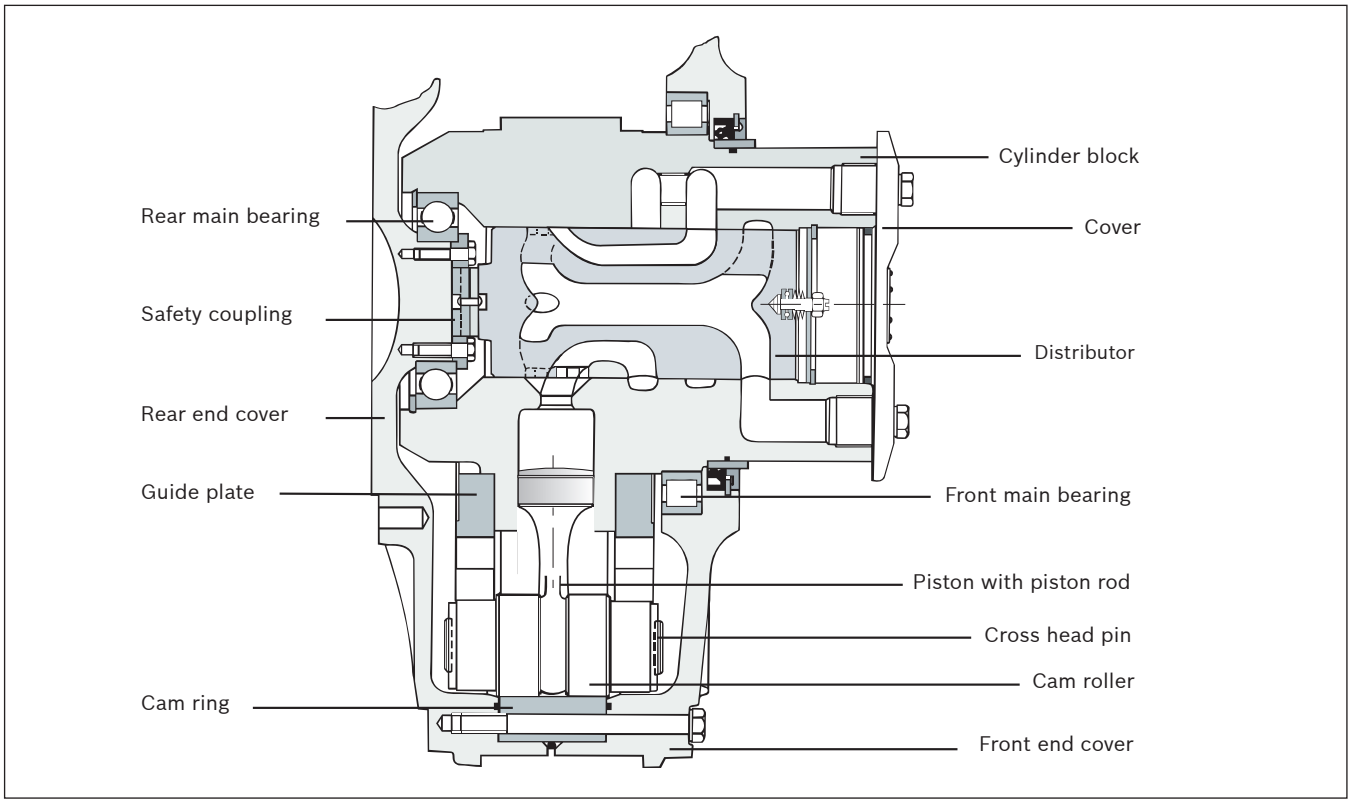

Fig. 72: Series 44

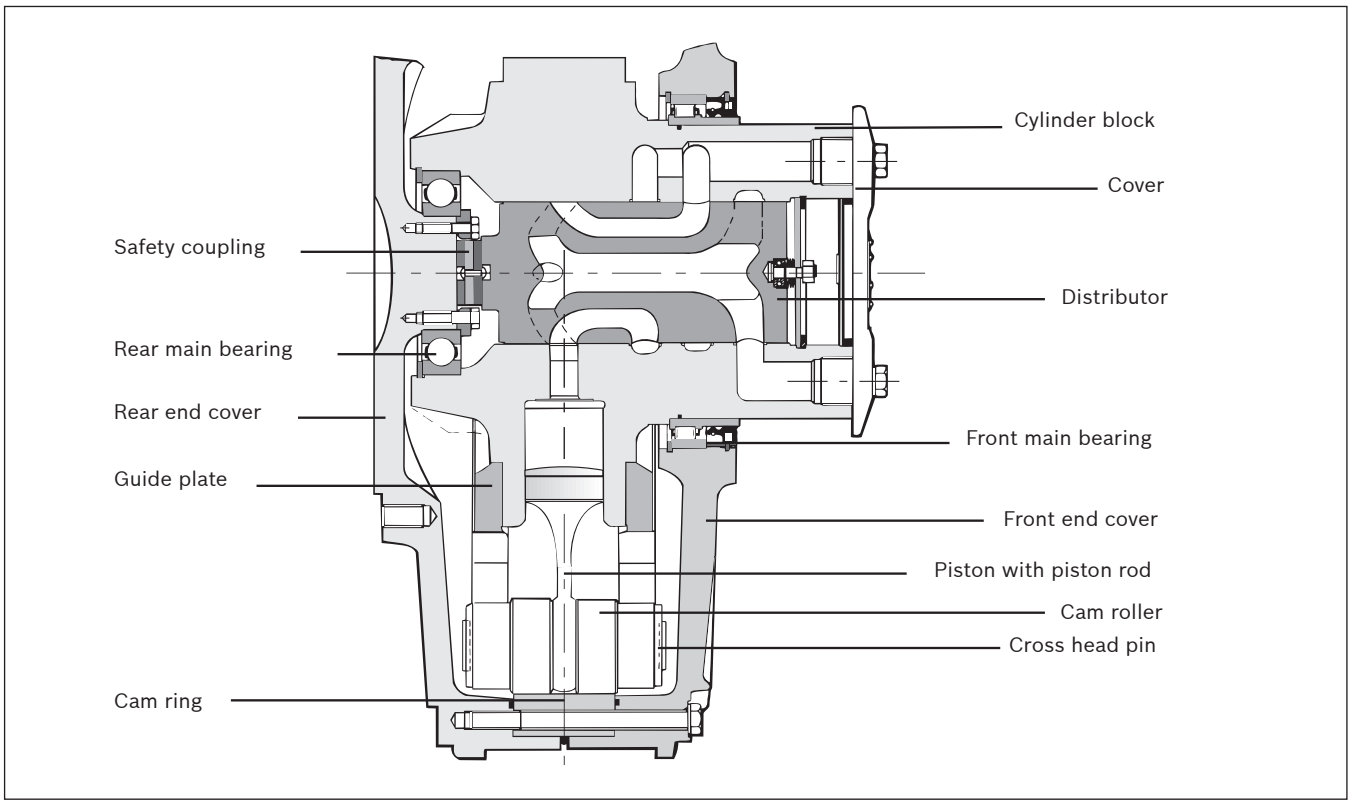

Fig. 73: Series 64

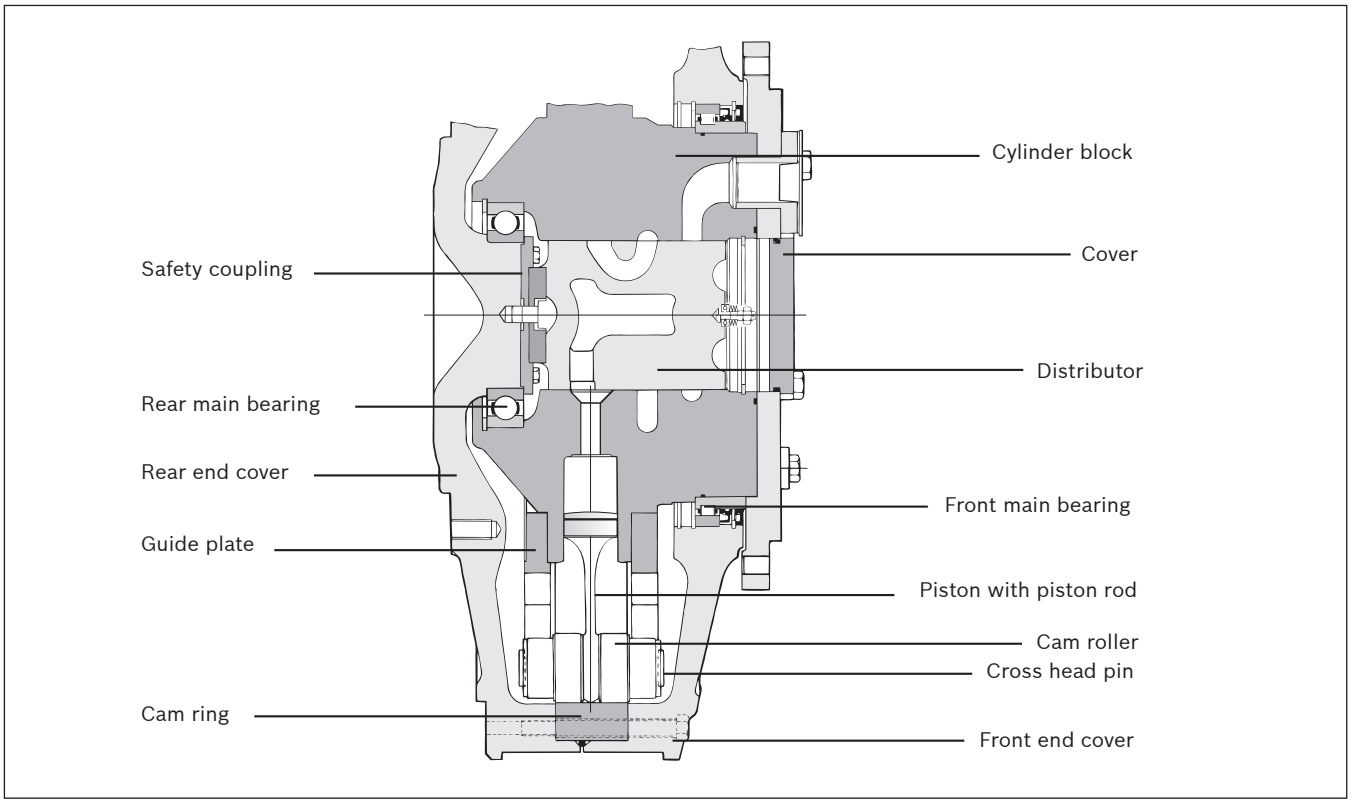

Fig. 74: Series 84

7 Declaration of incorporation

Example of the Declaration of Incorporation given by Hägglunds Drives AB.

HÄGGLUNDS

Declaration of Incorporation of partly completed machinery

As defined by the EC Machinery Directive 2006/42/EC, Appendix II B

The manufacturer

Hägglunds Drives AB

hereby declares that the partly completed machinery

Name: Viking
Function: Hydraulic motor
Model: Viking
Type: Viking
Trade name: Viking

satisfies the following essential requirements of Machinery Directive 2006/42/EC in accordance with the chapter numbers in Appendix I:

General principle no. 1.									
1.1.3	1.1.5	1.3.1	1.3.2	1.3.3	1.3.4	1.3.6	1.3.7	1.5.3	1.5.4
1.5.5	1.5.6	1.5.8	1.5.13	1.6.1	1.6.3	1.7.2	1.7.3	1.7.4	

The requirements are fulfilled provided that the data in the product documentation (fitting instructions, operating instructions, project management and configuration documents) are implemented by the product user. The requirements of Appendix I to Machinery Directive 2006/42/EC not mentioned here are not applied and have no relevance for the product.

It is also declared that the special technical documents for this partly completed machinery have been compiled in accordance with Appendix VII, Part B. These are transferred on request to the market surveillance body in paper-based/electronic format.

Conformity with the provisions of further EU Directives, Standards or Specifications:

SS-EN 982
SS-EN ISO 12100-1
SS-EN ISO 12100-2

The partly completed machinery may only be put into operation when it has been established that the machine into which the partly completed machinery is to be incorporated conforms to the provisions of EC Machinery Directive 2006/42/EC, where relevant according to this directive.

The individual below is authorized to compile the relevant technical files:

Name: Björn Leidelöf
Address: Hägglunds Drives AB, S-890 42 Mellansel

Björn Leidelöf Mellansel, 2009-12-29

We reserve the right to make changes to the content of the Declaration of Incorporation. Current issue on request.

The Declaration of Incorporation above, is available on request for deliveries from Hägglunds Drives AB. Translations into other languages are also available.

8 Notes

NOTES

NOTES

NOTES

The Drive & Control Company

Rexroth
Bosch Group

Bosch Rexroth Mellansel AB
SE-895 80 Mellansel
Sweden
Tel. +46 (0) 660 870 00
Fax +46 (0) 660 871 60
documentation.mll@boschrexroth.se
www.boschrexroth.com/hagglunds

Your local contact can be found at:
www.boschrexroth.com/adresses

We reserve the right to make changes
Printed in Sweden
RE 15310-WA/10.2015